Public Input No. 2760-NFPA 70-2020 [Global Input]

Art. 501.10 A (1) (4) Reference Art. 727.4 (Change to 341.10)

Art. 501.10 B (1) #4 Reference Art. 727.4 (Change to 341.10)

Art. 502.10 A (1) #5 Reference Art. 727.4 (Change to 341.10)

Art. 502.10 B (1) #6 Reference Art. 727.4 (Change to 341.10)

Art. 503.10 A (1) #3 Reference Art. 727.4 (Change to 341.10)

Art. 505.15 B (1) #3 Reference Art. 727.4 and 727.5 (Change to 341.10 & 341.12)

Art. 505.15 C (1) #3 Reference Art. 727.4 (Change to 341.10)

Art. 506.15 A #4 Reference Art. 727.4 (Change to 341.10)

Art. 506.15 C #6 Reference Art. 727.4 (Change to 341.10)

Art. 511.7 A (1) Reference Art. 727 (Change to 341)

Art. 515.7 A Reference Art. 727.4 (Change to 341.10)

Statement of Problem and Substantiation for Public Input

This Public Comment is submitted on behalf of a task group appointed by the Chairs of NEC® CMP-3 & CMP-6. This Task Group was appointed to review whether NEC® Article 727 should be relocated to Chapter 3 where it was originally proposed. Task Group members are Dennis Nielsen, George Zimmerman, Jerry Kent, Ron Tellas, Kelly Lamp and Keith Waters.

Task Group members noted that ITC tray cable was originally accepted by CMP-6 for Chapter 3, however, the correlating committee at the time chose to have it put in Chapter 7. This Task Group's work confirmed that the material should be moved, but changes needed to be made to meet the chapter 3 style manual requirements. The Task Group recommends acceptance of this public input to move requirements for Instrumentation Tray Cable (ITC) to Chapter 3 and placed under the purview of CMP-6.

The relocation of 727 to 341 creates the need to update a number of articles within the purview of CMP-14. The task group asks CMP-14 to make these revisions to avoid any correlation issues.

Related Public Inputs for This Document

Related Input	Relationship
Public Input No. 2696-NFPA 70-2020 [Article 727]	PI that creates the need for this change

Submitter Information Verification

Submitter Full Name: Keith Waters
Organization: Schneider Electric

Street Address:
City:
State:
Zip:
Submittal Date: Mon Aug 31 09:40:28 EDT 2020
Committee: NEC-P14

Committee Statement

Resolution: If CMP3 accepts the direction to relocate Article 727 to 341, the references identified in this PI will be updated as recommended. CMP 14 will review the CMP 3 action on this relocation in the First Draft Report and correlate accordingly.

Public Input No. 702-NFPA 70-2020 [Definition: Hermetically Sealed.]

Hermetically Sealed Device .

~~Equipment~~ A device that is sealed against the entrance of an external atmosphere ~~where~~ and in which the seal is made by fusion ~~, for example, soldering, brazing, welding, or the fusion of~~ of metal to metal, ceramic to metal or glass to metal.

Informational Note: For further information, see ANSI/~~ISA-12.12.01-2013~~ UL 121201-2017 , *Nonincendive Electrical Equipment for Use in Class I and II, Division 2, and Class III, Divisions 1 and 2 Hazardous (Classified) Locations*.

Statement of Problem and Substantiation for Public Input

ANSI/ISA-12.12.01-2013 has been replaced by ANSI/UL 121201-2017. Also, revised title and text of the definition to match the ANSI definition in UL 121201.

See also PI Nos. 703, 704, 705 and 706.

Related Public Inputs for This Document

Related Input	Relationship
Public Input No. 703-NFPA 70-2020 [Definition: Nonincendive Circuit.]	
Public Input No. 704-NFPA 70-2020 [Definition: Nonincendive Component.]	
Public Input No. 705-NFPA 70-2020 [Definition: Nonincendive Equipment.]	
Public Input No. 706-NFPA 70-2020 [Definition: Nonincendive Field Wiring Apparatus.]	
Public Input No. 703-NFPA 70-2020 [Definition: Nonincendive Circuit.]	
Public Input No. 704-NFPA 70-2020 [Definition: Nonincendive Component.]	
Public Input No. 705-NFPA 70-2020 [Definition: Nonincendive Equipment.]	
Public Input No. 706-NFPA 70-2020 [Definition: Nonincendive Field Wiring Apparatus.]	

Submitter Information Verification

Submitter Full Name: Paul Kelly
Organization: UL LLC
Street Address:
City:
State:
Zip:
Submittal Date: Thu Mar 19 20:40:51 EDT 2020
Committee: NEC-P14

Committee Statement

Resolution: FR-8655-NFPA 70-2021

Statement: The current definition and informational note is revised to better align with the definition in ANSI/UL 121201.

Public Input No. 3670-NFPA 70-2020 [Definition: Motor Fuel Dispensing Facility.]

Motor Fuel Dispensing Facility.

That portion of a property where motor fuels are stored and dispensed from fixed equipment into the fuel tanks of motor vehicles or marine craft or into approved containers, including all equipment used in connection therewith. [**30A:**3.3.11]

Informational Note: ~~Refer to Articles 510 and 511~~ See 511.1 with respect to electrical wiring and equipment for other areas used as lubritoriums, service rooms, repair rooms, offices, salesrooms, compressor rooms, and similar locations.

Statement of Problem and Substantiation for Public Input

Section 4.1.4 of the 2020 NEC(r) Style Manual prohibits reference to an entire article, other than Article 100. As such, it is proposed that we instead refer folks to the scope of the relevant article.

Submitter Information Verification

Submitter Full Name: Richard Holub
Organization: The DuPont Company, Inc.
Street Address:
City:
State:
Zip:
Submittal Date: Wed Sep 09 10:32:20 EDT 2020
Committee: NEC-P14

Committee Statement

Resolution: FR-8671-NFPA 70-2021
Statement: Revise to reference the scope section of Article 511 for compliance with the Style Manual requirement to not reference an entire article.

Public Input No. 703-NFPA 70-2020 [Definition: Nonincendive Circuit.]

Nonincendive Circuit.

A circuit, other than field wiring, in which any arc or thermal effect produced under intended operating conditions of the equipment, is not capable, under specified test conditions, of igniting the flammable gas–air, vapor–air, or dust–air mixture.

Informational Note: Conditions are described in ANSI/~~ISA-12.12.01-2013~~ UL 121201-2017 , *Nonincendive Electrical Equipment for Use in Class I and II, Division 2, and Class III, Divisions 1 and 2 Hazardous (Classified) Locations*.

Statement of Problem and Substantiation for Public Input

ANSI/ISA-12.12.01-2013 has been replaced by ANSI/UL 121201-2017.

See also PI Nos. 702, 704, 705 and 706.

Related Public Inputs for This Document

Related Input	Relationship
Public Input No. 702-NFPA 70-2020 [Definition: Hermetically Sealed.]	
Public Input No. 704-NFPA 70-2020 [Definition: Nonincendive Component.]	
Public Input No. 705-NFPA 70-2020 [Definition: Nonincendive Equipment.]	
Public Input No. 706-NFPA 70-2020 [Definition: Nonincendive Field Wiring Apparatus.]	
Public Input No. 702-NFPA 70-2020 [Definition: Hermetically Sealed.]	
Public Input No. 704-NFPA 70-2020 [Definition: Nonincendive Component.]	
Public Input No. 705-NFPA 70-2020 [Definition: Nonincendive Equipment.]	
Public Input No. 706-NFPA 70-2020 [Definition: Nonincendive Field Wiring Apparatus.]	

Submitter Information Verification

Submitter Full Name: Paul Kelly
Organization: UL LLC
Street Address:
City:
State:
Zip:
Submittal Date: Thu Mar 19 20:47:26 EDT 2020
Committee: NEC-P14

Committee Statement

Resolution: FR-8656-NFPA 70-2021
Statement: The referenced standard titles have been updated.

Public Input No. 704-NFPA 70-2020 [Definition: Nonincendive Component.]

Nonincendive Component.

A component having contacts for making or breaking an incendive circuit and the contacting mechanism is constructed so that the component is incapable of igniting the specified flammable gas–air or vapor–air mixture. The housing of such a ~~nonincendive~~ component is not intended to exclude the flammable atmosphere or contain an explosion.

Informational Note: For further information, see ANSI/~~ISA-12.12.01-2013~~ UL 121201-2017 , *Nonincendive Electrical Equipment for Use in Class I and II, Division 2, and Class III, Divisions 1 and 2 Hazardous (Classified) Locations.*

Statement of Problem and Substantiation for Public Input

ANSI/ISA-12.12.01-2013 has been replaced by ANSI/UL 121201-2017. Also, revised text to not use the term in the definition.

See also PI Nos. 702, 703, 705 and 706.

Related Public Inputs for This Document

Related Input	Relationship
Public Input No. 702-NFPA 70-2020 [Definition: Hermetically Sealed.]	
Public Input No. 703-NFPA 70-2020 [Definition: Nonincendive Circuit.]	
Public Input No. 705-NFPA 70-2020 [Definition: Nonincendive Equipment.]	
Public Input No. 706-NFPA 70-2020 [Definition: Nonincendive Field Wiring Apparatus.]	
Public Input No. 702-NFPA 70-2020 [Definition: Hermetically Sealed.]	
Public Input No. 703-NFPA 70-2020 [Definition: Nonincendive Circuit.]	
Public Input No. 705-NFPA 70-2020 [Definition: Nonincendive Equipment.]	
Public Input No. 706-NFPA 70-2020 [Definition: Nonincendive Field Wiring Apparatus.]	

Submitter Information Verification

Submitter Full Name: Paul Kelly
Organization: UL LLC
Street Address:
City:
State:
Zip:
Submittal Date: Thu Mar 19 20:49:31 EDT 2020
Committee: NEC-P14

Committee Statement

Resolution: FR-8657-NFPA 70-2021

Statement: The text has been revised to not use the term in the definition. The referenced standard titles have been updated.

Public Input No. 705-NFPA 70-2020 [Definition: Nonincendive Equipment.]

Nonincendive Equipment.

Equipment having electrical/electronic circuitry that is incapable, under normal operating conditions, of causing ignition of a specified flammable gas–air, vapor–air, or dust–air mixture due to arcing or thermal means.

Informational Note: For further information, see ANSI/~~ISA-12.12.01-2013~~ UL 121201-2017 , *Nonincendive Electrical Equipment for Use in Class I and II, Division 2, and Class III, Divisions 1 and 2 Hazardous (Classified) Locations*.

Statement of Problem and Substantiation for Public Input

ANSI/ISA-12.12.01-2013 has been replaced by ANSI/UL 121201-2017.

See also PI Nos. 702, 703, 704 and 706.

Related Public Inputs for This Document

Related Input	Relationship
Public Input No. 702-NFPA 70-2020 [Definition: Hermetically Sealed.]	
Public Input No. 703-NFPA 70-2020 [Definition: Nonincendive Circuit.]	
Public Input No. 704-NFPA 70-2020 [Definition: Nonincendive Component.]	
Public Input No. 706-NFPA 70-2020 [Definition: Nonincendive Field Wiring Apparatus.]	
Public Input No. 702-NFPA 70-2020 [Definition: Hermetically Sealed.]	
Public Input No. 703-NFPA 70-2020 [Definition: Nonincendive Circuit.]	
Public Input No. 704-NFPA 70-2020 [Definition: Nonincendive Component.]	
Public Input No. 706-NFPA 70-2020 [Definition: Nonincendive Field Wiring Apparatus.]	

Submitter Information Verification

Submitter Full Name: Paul Kelly
Organization: UL LLC
Street Address:
City:
State:
Zip:
Submittal Date: Thu Mar 19 20:50:31 EDT 2020
Committee: NEC-P14

Committee Statement

Resolution: FR-8658-NFPA 70-2021
Statement: The referenced standard titles have been updated.

Public Input No. 706-NFPA 70-2020 [Definition: Nonincendive Field Wiring Apparatus.]

Nonincendive Field Wiring Apparatus.

Apparatus intended to be connected to nonincendive field wiring.

Informational Note: For further information, see ANSI/~~ISA-12.12.01-2013~~ UL 121201-2017 , *Nonincendive Electrical Equipment for Use in Class I and II, Division 2, and Class III, Divisions 1 and 2 Hazardous (Classified) Locations*.

Statement of Problem and Substantiation for Public Input

ANSI/ISA-12.12.01-2013 has been replaced by ANSI/UL 121201-2017.

See also PI Nos. 702, 703, 704 and 705.

Related Public Inputs for This Document

Related Input	Relationship
Public Input No. 702-NFPA 70-2020 [Definition: Hermetically Sealed.]	
Public Input No. 703-NFPA 70-2020 [Definition: Nonincendive Circuit.]	
Public Input No. 704-NFPA 70-2020 [Definition: Nonincendive Component.]	
Public Input No. 705-NFPA 70-2020 [Definition: Nonincendive Equipment.]	
Public Input No. 702-NFPA 70-2020 [Definition: Hermetically Sealed.]	
Public Input No. 703-NFPA 70-2020 [Definition: Nonincendive Circuit.]	
Public Input No. 704-NFPA 70-2020 [Definition: Nonincendive Component.]	
Public Input No. 705-NFPA 70-2020 [Definition: Nonincendive Equipment.]	

Submitter Information Verification

Submitter Full Name: Paul Kelly
Organization: UL LLC
Street Address:
City:
State:
Zip:
Submittal Date: Thu Mar 19 20:51:55 EDT 2020
Committee: NEC-P14

Committee Statement

Resolution: FR-9228-NFPA 70-2021
Statement: The referenced standard title has been updated.

Public Input No. 2218-NFPA 70-2020 [New Definition after Definition: Aircraft Painting Hangar.]

TITLE OF NEW CONTENT

Artificially Ventilated Room "v" . Room volume protected by artificial ventilation and of sufficient size to permit the entry of a person who may occupy the room.

Statement of Problem and Substantiation for Public Input

Standard UL 60079-13-2020, Explosive Atmospheres – Part 13: Equipment protection by pressurized room “p” and artificially ventilated room “v” has been published. This publication provides requirements for rooms intended for human entry where either pressurization or forced ventilation is used as a means of reducing risk of explosion. Such equipment exists, and with publication of a standard, should be a permitted method of protection. The proposed definition is taken directly from UL 60079-13.

Related Public Inputs for This Document

Related Input	Relationship
Public Input No. 2217-NFPA 70-2020 [New Definition after Definition: Pressurized Enclosure “p”.]	New definition from the same publication as PI 2217

Submitter Information Verification

Submitter Full Name: William Fiske
Organization: Intertek Testing Services
Street Address:
City:
State:
Zip:
Submittal Date: Tue Aug 11 15:02:33 EDT 2020
Committee: NEC-P14

Committee Statement

Resolution: Ventilation is not added as a type of protection because ventilation is currently an area classification consideration rather than a type of protection.

Public Input No. 1959-NFPA 70-2020 [New Definition after Definition: Control Drawing.]

Cable connector

An electrical device that is part of a cable assembly and that, by insertion of two mating configurations, establishes a connection between the conductors of the cable assembly and the conductors of a fixed piece of equipment.

Informational Note: For unclassified locations, such cable connectors are referred to as male and female fittings. Examples of standards for such male and female fittings include ANSI/UL 2238-2018, Cable Assemblies and Fittings for Industrial Control and Signal Distribution,and ANSI/UL 2237-2019, Multi-Point Interconnection Power Cable Assemblies for Industrial Machinery.

Statement of Problem and Substantiation for Public Input

See Item 3 of the following Statement of Problem and Substantiation for Public Input for Public Input No. 1958-NFPA 70-2020 [New Section after 501.140]... The following provides explanation and background on the proposal… 1. Instead of revising 501.105, which would limit this revision to just Meters, Instruments and Relays, a new 501.141 is being proposed that is not limited by the associated equipment. 2. Scope is only Class I, Division 2 areas, involving only Type P cables based on its flexibility. 3. Instead of using the term “plug and receptacle”, a new term “cable connector” is proposed. This new term is aligned with how unclassified cable assemblies are certified in accordance with the applicable unclassified ANSI standards for field applications. 4. The format / structure of the proposed new 501.141(A) and (B) is based on a combination of 501.140 and 501.105(B)(6), along with 8.8 of UL 121201 / CSA 213.

See also Public Input No. 1958-NFPA 70-2020.

Related Public Inputs for This Document

Related Input	Relationship
Public Input No. 1958-NFPA 70-2020 [New Section after 501.140]	
Public Input No. 1958-NFPA 70-2020 [New Section after 501.140]	

Submitter Information Verification

Submitter Full Name: Paul Kelly
Organization: UL LLC
Street Address:
City:
State:
Zip:
Submittal Date: Tue Jul 21 20:37:09 EDT 2020
Committee: NEC-P14

Committee Statement

Resolution: FR-8662-NFPA 70-2021

Statement: New definition for cable connector for application in hazardous (classified) locations is added to Article 100.

Panel Statement: Correlate with CMP-6 for Article 337 to add an informational note reverse of one above to acknowledge cable connectors in addition to fittings. Cable connectors are commonly used to terminate Type P cable on mobile land based gas and oil drilling rigs.

Public Input No. 2137-NFPA 70-2020 [New Definition after Definition: Encapsulation “m”.]

Enclosed-break

A device incorporating electrical contacts that are made and broken and that, if an internal explosion of the flammable gas or vapor which can enter it occurs, the device will withstand the internal explosion without suffering damage and without communicating the internal explosion to the external flammable gas or vapor. (CMP-14)

Informational Note: For further information, see ANSI/UL 121201-2017, *Nonincendive Electrical Equipment for Use in Class I and II, Division 2, and Class III, Divisions 1 and 2 Hazardous (Classified) Locations* .

Statement of Problem and Substantiation for Public Input

"Enclosed-break" is a Class I, Division 2 type of protection in accordance with ANSI/UL 121201. It is not a new Class I, Division 2 type of protection, but has not been identified in the NEC as such. This proposal simply addresses that oversight.

See also Public Input No. 2138-NFPA 70-2020.

Related Public Inputs for This Document

Related Input	Relationship
Public Input No. 2138-NFPA 70-2020 [New Section after 500.7(C)]	
Public Input No. 2138-NFPA 70-2020 [New Section after 500.7(C)]	

Submitter Information Verification

Submitter Full Name: Paul Kelly
Organization: UL LLC
Street Address:
City:
State:
Zip:
Submittal Date: Mon Aug 03 09:54:43 EDT 2020
Committee: NEC-P14

Committee Statement

Resolution: FR-8666-NFPA 70-2021
Statement: Definition for “enclosed-break” is added.

Public Input No. 2107-NFPA 70-2020 [New Definition after Definition: Nonincendive Field Wiring ...]

Nonsparking

A device constructed to minimize the risk of occurrence of arcs or sparks capable of creating an ignition hazard during conditions of normal operation. (CMP-14)

Informational Note: For further information, see ANSI/UL 121201-2017, *Nonincendive Electrical Equipment for Use in Class I and II, Division 2, and Class III, Divisions 1 and 2 Hazardous (Classified) Locations* .

Statement of Problem and Substantiation for Public Input

"Nonsparking" is a Class I, Division 2 type of protection in accordance with ANSI/UL 121201. It is not a new Class I, Division 2 type of protection, but has not been identified in the NEC as such. This proposal simply addresses that oversight.

See also Public Input No. 2108-NFPA 70-2020.

Related Public Inputs for This Document

Related Input	Relationship
Public Input No. 2108-NFPA 70-2020 [New Section after 500.7(H)]	
Public Input No. 2108-NFPA 70-2020 [New Section after 500.7(H)]	

Submitter Information Verification

Submitter Full Name: Paul Kelly
Organization: UL LLC
Street Address:
City:
State:
Zip:
Submittal Date: Thu Jul 30 19:46:43 EDT 2020
Committee: NEC-P14

Committee Statement

Resolution: FR-9227-NFPA 70-2021
Statement: Definition for “nonsparking” is added.

Public Input No. 2217-NFPA 70-2020 [New Definition after Definition: Pressurized Enclosure “p”.]

TITLE OF NEW CONTENT

Pressurized Room "p". A room volume protected by pressurization and of sufficient size to permit the entry of a person who may occupy the room....

Statement of Problem and Substantiation for Public Input

Standard UL 60079-13-2020, Explosive Atmospheres – Part 13: Equipment protection by pressurized room “p” and artificially ventilated room “v” has been published. This publication provides requirements for rooms intended for human entry where either pressurization or forced ventilation is used as a means of reducing risk of explosion. Such equipment exists, and with publication of a standard, should be a permitted method of protection. The definition of "Pressurized Room 'p'" is taken directly from UL 60079-13

Related Public Inputs for This Document

Related Input	Relationship
Public Input No. 2218-NFPA 70-2020 [New Definition after Definition: Aircraft Painting Hangar.]	
Public Input No. 2219-NFPA 70-2020 [New Section after 505.8(N)]	
Public Input No. 2220-NFPA 70-2020 [New Section after 505.9]	
Public Input No. 2222-NFPA 70-2020 [Section No. 505.16(B)(3)]	
Public Input No. 2224-NFPA 70-2020 [New Section after 506.8(N)]	
Public Input No. 2263-NFPA 70-2020 [Section No. 505.9(C)(2)]	
Public Input No. 2264-NFPA 70-2020 [Section No. 506.9(C)(2)]	

Submitter Information Verification

Submitter Full Name: William Fiske
Organization: Intertek Testing Services
Street Address:
City:
State:
Zip:
Submittal Date: Tue Aug 11 14:54:10 EDT 2020
Committee: NEC-P14

Committee Statement

Resolution: FR-8668-NFPA 70-2021
Statement: Definition for “pressurized room” is added.

Public Input No. 2104-NFPA 70-2020 [New Definition after Definition: Purged and Pressurized.]

Sealed [as applied to Hazardous (Classified) Locations].

A device which is so constructed that it is sealed effectively against entry of an external atmosphere, and is not opened during normal operation or for any maintenance activities. (CMP-14)

Informational Note: For further information, see ANSI/UL 121201-2017, *Nonincendive Electrical Equipment for Use in Class I and II, Division 2, and Class III, Divisions 1 and 2 Hazardous (Classified) Locations* .

Statement of Problem and Substantiation for Public Input

"Sealed device" is a Class I and II, Division 2 and Class III type of protection in accordance with ANSI/UL 121201. It is not a new Class I and II, Division 2 or Class III type of protection, but has not been identified in the NEC as such. This proposal simply addresses that oversight.

See also Public Input No. 2106-NFPA 70-2020.

Related Public Inputs for This Document

Related Input	Relationship
Public Input No. 2106-NFPA 70-2020 [New Section after 500.7(J)]	
Public Input No. 2106-NFPA 70-2020 [New Section after 500.7(J)]	

Submitter Information Verification

Submitter Full Name: Paul Kelly
Organization: UL LLC
Street Address:
City:
State:
Zip:
Submittal Date: Thu Jul 30 15:36:43 EDT 2020
Committee: NEC-P14

Committee Statement

Resolution: FR-8664-NFPA 70-2021
Statement: Definition for “sealed” as applied to hazardous (classified) locations is added.

Public Input No. 726-NFPA 70-2020 [New Definition after Definition: Spray Room.]

Special Protection "s". Type of protection that permits design, assessment and testing of equipment that cannot be fully assessed within a recognized type of protection or combination of recognized types of protection because of functional or operational limitations, but which can be demonstrated to provide the necessary equipment protection level (EPL).

Informational Note No. 1: See ANSI/UL 60079-33, Explosive Atmospheres — Part 33: Equipment protection by special protection "s."

Informational Note No. 2: Special Protection "s" under the Zone system is equivalent in concept to Other Protection Techniques under the Division system as described in 500.7(L).

Informational Note No. 3: UL ANSI/60079-33 is only intended for equipment that is outside the Scope of other ANSI/UL 60079 series protection technique standards.

Statement of Problem and Substantiation for Public Input

Under the NEC Division system, there is permission for Other Protection Techniques as described in 500.7(L). This permits the ability for new and innovative designs to be certified for Division 1 or 2 applications that are outside the Scope of other Division system Protection Techniques (e.g. Explosionproof, Intrinsic Safety, and Dust Ignitionproof).

While there is no such permission under the NEC Zone system, there is such permission under the IEC Zone system based on IEC 60079-33, Explosive atmospheres – Part 33: Equipment protection by special protection "s". The U.S. is in the process of adopting IEC 60079-33 as ANSI/UL 60079-33 with National differences. This adoption is expected to be in place prior to the Second Draft Public Comment Closing Date.

The anticipated ANSI/UL 60079-33 (as with the existing IEC 60079-33) is only intended for equipment that is outside the Scope of other ANSI/UL 60079 series protection technique standards.

Also see PI Nos. 727, 728, 729 and 730.

Related Public Inputs for This Document

Related Input	Relationship
Public Input No. 727-NFPA 70-2020 [New Section after 505.8(N)]	
Public Input No. 728-NFPA 70-2020 [Section No. 505.9(C)(2)]	
Public Input No. 729-NFPA 70-2020 [New Section after 506.8(N)]	
Public Input No. 730-NFPA 70-2020 [Section No. 506.9(C)(2)]	
Public Input No. 727-NFPA 70-2020 [New Section after 505.8(N)]	
Public Input No. 728-NFPA 70-2020 [Section No. 505.9(C)(2)]	
Public Input No. 729-NFPA 70-2020 [New Section after 506.8(N)]	
Public Input No. 730-NFPA 70-2020 [Section No. 506.9(C)(2)]	

Submitter Information Verification

Submitter Full Name: Paul Kelly

Organization: UL LLC
Street Address:
City:
State:
Zip:
Submittal Date: Fri Mar 20 16:04:24 EDT 2020
Committee: NEC-P14

Committee Statement

Resolution: FR-8660-NFPA 70-2021
Statement: New definition for type of protection - Special Protection “s”.

Public Input No. 1128-NFPA 70-2020 [Article 500]

Article 500 Hazardous (Classified) Locations, Classes I, II, and III, Divisions 1 and 2

500.1 Scope — Articles 500 Through 504.

Articles 500 through 504 cover the requirements for electrical and electronic equipment and wiring for all voltages in Class I, Divisions 1 and 2; Class II, Divisions 1 and 2; and Class III, Divisions 1 and 2 locations where fire or explosion hazards may exist due to flammable gases, flammable liquid–produced vapors, combustible liquid–produced vapors, combustible dusts, or ignitible fibers/flyings.

Informational Note No. 1: The unique hazards associated with explosives, pyrotechnics, and blasting agents are not addressed in this article.

Informational Note No. 2: For the requirements for electrical and electronic equipment and wiring for all voltages in Zone 0, Zone 1, and Zone 2 hazardous (classified) locations where fire or explosion hazards may exist due to flammable gases or vapors or flammable liquids, refer to Article 505.

Informational Note No. 3: For the requirements for electrical and electronic equipment and wiring for all voltages in Zone 20, Zone 21, and Zone 22 hazardous (classified) locations where fire or explosion hazards may exist due to combustible dusts or ignitible fibers/flyings, refer to Article 506.

Informational Note No. 4: Text that is followed by a reference in brackets has been extracted from NFPA 497-2017, *Recommended Practice for the Classification of Flammable Liquids, Gases, or Vapors and of Hazardous (Classified) Locations for Electrical Installations in Chemical Process Areas*, and NFPA 499-2017, *Recommended Practice for the Classification of Combustible Dusts and of Hazardous (Classified) Locations for Electrical Installation in Chemical Process Areas.* Only editorial changes were made to the extracted text to make it consistent with this *Code*.

500.3 Other Articles.

Except as modified in Articles 500 through 504, all other applicable rules contained in this *Code* shall apply to electrical equipment and wiring installed in hazardous (classified) locations.

500.4 Documentation.

All areas designated as hazardous (classified) locations shall be properly documented. This documentation shall be available to those authorized to design, install, inspect, maintain, or operate electrical equipment at the location.

Informational Note No. 1: For further information on the classification of locations, see NFPA 30-2018, *Flammable and Combustible Liquids Code*; NFPA 32-2016, *Standard for Drycleaning Facilities*; NFPA 33-2018, *Standard for Spray Application Using Flammable or Combustible Materials*; NFPA 34-2018, *Standard for Dipping, Coating and Printing Processes Using Flammable or Combustible Liquids*; NFPA 35-2016, *Standard for the Manufacture of Organic Coatings*; NFPA 36-2017, *Standard for Solvent Extraction Plants*; NFPA 45-2019, *Standard on Fire Protection for Laboratories Using Chemicals*; NFPA 55-2016, *Compressed Gases and Cryogenic Fluids Code*; NFPA 58-2017, *Liquefied Petroleum Gas Code*; NFPA 59-2018, *Utility LP-Gas Plant Code*; NFPA 497-2017, *Recommended Practice for the Classification of Flammable Liquids, Gases, or Vapors and of Hazardous (Classified) Locations for Electrical Installations in Chemical Process Areas*; NFPA 499-2017, *Recommended Practice for the Classification of Combustible Dusts and of Hazardous (Classified) Locations for Electrical Installations in Chemical Process Areas*; NFPA 820-2016, *Standard for Fire Protection in Wastewater Treatment and Collection Facilities*; ANSI/API RP 500-2012, *Recommended Practice for Classification of Locations of Electrical Installations at Petroleum Facilities Classified as Class I, Division 1 and Division 2*; and ISA-12.10-1988, *Area Classification in Hazardous (Classified) Dust Locations*.

Informational Note No. 2: For further information on protection against static electricity and lightning hazards in hazardous (classified) locations, see NFPA 77-2019, *Recommended Practice on Static Electricity*; NFPA 780-2017, *Standard for the Installation of Lightning Protection Systems*; and API RP 2003-2015, *Protection Against Ignitions Arising Out of Static Lightning and Stray Currents*.

Informational Note No. 3: For further information on ventilation, see NFPA 30-2018, *Flammable and Combustible Liquids Code*; and ANSI/API RP 500-2012, *Recommended Practice for Classification of Locations for Electrical Installations at Petroleum Facilities Classified as Class I, Division 1 and Division 2*.

Informational Note No. 4: For further information on electrical systems for hazardous (classified) locations on offshore oil- and gas-producing platforms, drilling rigs, and workover rigs, see ANSI/API RP 14F-2018, *Recommended Practice for Design and Installation of Electrical Systems for Fixed and Floating Offshore Petroleum Facilities for Unclassified and Class I, Division 1 and Division 2 Locations*.

Informational Note No. 5: Portable or transportable equipment having self-contained power supplies, such as battery-operated equipment, could potentially become an ignition source in hazardous (classified) locations. See ANSI/UL 121203-2011, *Standard for Portable Electronic Products Suitable for Use in Class I and II, Division 2, Class I Zone 2 and Class III, Division 1 and 2 Hazardous (Classified) Locations*.

Informational Note No. 6: For information on electrical resistance trace heating for hazardous (classified) locations, see ANSI/UL 60079-30-1-2017, *Explosive Atmospheres — Electrical Resistance Trace Heating — General and Testing Requirements*, and ~~ANSI~~ IEC /IEEE 60079-30-2-2015, IEC/ IEEE ~~*/IEC International*~~ *International Standard for Explosive atmospheres — Part 30-2: Electrical resistance trace heating — Application guide for design, installation, and maintenance*.

Informational Note No. 7: For information on electric skin effect trace heating for hazardous (classified) locations, see IEEE 844.1-2017/CSA C22.2 No. 293.1-17, *IEEE/CSA Standard for Skin Effect Trace Heating of Pipelines, Vessels, Equipment, and Structures — General, Testing, Marking, and Documentation Requirements*, and IEEE 844.2-2017/CSA C293.2-17, *IEEE/CSA Standard for Skin Effect Trace Heating of Pipelines, Vessels, Equipment, and Structures — Application Guide for Design, Installation, Testing, Commissioning, and Maintenance*.

500.5 Classifications of Locations.

(A) General.

Locations shall be classified depending on the properties of the flammable gas, flammable liquid–produced vapor, combustible liquid–produced vapors, combustible dusts, or fibers/flyings that could be present, and the likelihood that a flammable or combustible concentration or quantity is present. Each room, section, or area shall be considered individually in determining its classification. Where pyrophoric materials are the only materials used or handled, these locations are outside the scope of this article.

> Informational Note: Through the exercise of ingenuity in the layout of electrical installations for hazardous (classified) locations, it is frequently possible to locate much of the equipment in a reduced level of classification or in an unclassified location and, thus, to reduce the amount of special equipment required.

Refrigerant machinery rooms that contain ammonia refrigeration systems and are equipped with adequate mechanical ventilation that operates continuously or is initiated by a detection system at a concentration not exceeding 150 ppm shall be permitted to be classified as “unclassified” locations.

> Informational Note: For further information regarding classification and ventilation of areas involving closed-circuit ammonia refrigeration systems, see ANSI/IIAR 2-2014, *Standard for Safe Design of Closed-Circuit Ammonia Refrigeration Systems*.

(B) Class I Locations.

Class I locations are those in which flammable gases, flammable liquid–produced vapors, or combustible liquid–produced vapors are or may be present in the air in quantities sufficient to produce explosive or ignitible mixtures. Class I locations shall include those specified in 500.5(B)(1) and (B)(2).

(1) Class I, Division 1.

A Class I, Division 1 location is a location:

(1) In which ignitible concentrations of flammable gases, flammable liquid–produced vapors, or combustible liquid–produced vapors can exist under normal operating conditions, or

(2) In which ignitible concentrations of such flammable gases, flammable liquid–produced vapors, or combustible liquids above their flash points may exist frequently because of repair or maintenance operations or because of leakage, or

(3) In which breakdown or faulty operation of equipment or processes might release ignitible concentrations of flammable gases, flammable liquid–produced vapors, or combustible liquid–produced vapors and might also cause simultaneous failure of electrical equipment in such a way as to directly cause the electrical equipment to become a source of ignition

Informational Note No. 1: This classification usually includes the following locations:

(1) Where volatile flammable liquids or liquefied flammable gases are transferred from one container to another

(2) Interiors of spray booths and areas in the vicinity of spraying and painting operations where volatile flammable solvents are used

(3) Locations containing open tanks or vats of volatile flammable liquids

(4) Drying rooms or compartments for the evaporation of flammable solvents

(5) Locations containing fat- and oil-extraction equipment using volatile flammable solvents

(6) Portions of cleaning and dyeing plants where flammable liquids are used

(7) Gas generator rooms and other portions of gas manufacturing plants where flammable gas may escape

(8) Inadequately ventilated pump rooms for flammable gas or for volatile flammable liquids

(9) The interiors of refrigerators and freezers in which volatile flammable materials are stored in open, lightly stoppered, or easily ruptured containers

(10) All other locations where ignitible concentrations of flammable vapors or gases are likely to occur in the course of normal operations

Informational Note No. 2: In some Division 1 locations, ignitible concentrations of flammable gases or vapors may be present continuously or for long periods of time. Examples include the following:

(1) The inside of inadequately vented enclosures containing instruments normally venting flammable gases or vapors to the interior of the enclosure

(2) The inside of vented tanks containing volatile flammable liquids

(3) The area between the inner and outer roof sections of a floating roof tank containing volatile flammable fluids

(4) Inadequately ventilated areas within spraying or coating operations using volatile flammable fluids

(5) The interior of an exhaust duct that is used to vent ignitible concentrations of gases or vapors

Experience has demonstrated the prudence of avoiding the installation of instrumentation or other electrical equipment in these particular areas altogether or where it cannot be avoided because it is essential to the process and other locations are not feasible [see 500.5(A), Informational Note] using electrical equipment or instrumentation approved for the specific application or consisting of intrinsically safe systems as described in Article 504.

(2) Class I, Division 2.

A Class I, Division 2 location is a location:

(1) In which volatile flammable gases, flammable liquid–produced vapors, or combustible liquid–produced vapors are handled, processed, or used, but in which the liquids, vapors, or gases will normally be confined within closed containers or closed systems from which they can escape only in case of accidental rupture or breakdown of such containers or systems or in case of abnormal operation of equipment, or

(2) In which ignitible concentrations of flammable gases, flammable liquid–produced vapors, or combustible liquid–produced vapors are normally prevented by positive mechanical ventilation and which might become hazardous through failure or abnormal operation of the ventilating equipment, or

(3) That is adjacent to a Class I, Division 1 location, and to which ignitible concentrations of flammable gases, flammable liquid–produced vapors, or combustible liquid–produced vapors above their flash points might occasionally be communicated unless such communication is prevented by adequate positive-pressure ventilation from a source of clean air and effective safeguards against ventilation failure are provided.

Informational Note No. 1: This classification usually includes locations where volatile flammable liquids or flammable gases or vapors are used but that, in the judgment of the authority having jurisdiction, would become hazardous only in case of an accident or of some unusual operating condition. The quantity of flammable material that might escape in case of accident, the adequacy of ventilating equipment, the total area involved, and the record of the industry or business with respect to explosions or fires are all factors that merit consideration in determining the classification and extent of each location.

Informational Note No. 2: Piping without valves, checks, meters, and similar devices would not ordinarily introduce a hazardous condition even though used for flammable liquids or gases. Depending on factors such as the quantity and size of the containers and ventilation, locations used for the storage of flammable liquids or liquefied or compressed gases in sealed containers may be considered either hazardous (classified) or unclassified locations. See NFPA 30-2018, *Flammable and Combustible Liquids Code*, and NFPA 58-2017, *Liquefied Petroleum Gas Code*.

(C) Class II Locations.

Class II locations are those that are hazardous because of the presence of combustible dust. Class II locations shall include those specified in 500.5(C)(1) and (C)(2).

(1) Class II, Division 1.

A Class II, Division 1 location is a location:

(1) In which combustible dust is in the air under normal operating conditions in quantities sufficient to produce explosive or ignitible mixtures, or

(2) Where mechanical failure or abnormal operation of machinery or equipment might cause such explosive or ignitible mixtures to be produced, and might also provide a source of ignition through simultaneous failure of electrical equipment, through operation of protection devices, or from other causes, or

(3) In which Group E combustible dusts may be present in quantities sufficient to be hazardous in normal or abnormal operating conditions.

Informational Note: Dusts containing magnesium or aluminum are particularly hazardous, and the use of extreme precaution is necessary to avoid ignition and explosion.

(2) Class II, Division 2.

A Class II, Division 2 location is a location:

(1) In which combustible dust due to abnormal operations may be present in the air in quantities sufficient to produce explosive or ignitible mixtures; or

(2) Where combustible dust accumulations are present but are normally insufficient to interfere with the normal operation of electrical equipment or other apparatus, but could as a result of infrequent malfunctioning of handling or processing equipment become suspended in the air; or

(3) In which combustible dust accumulations on, in, or in the vicinity of the electrical equipment could be sufficient to interfere with the safe dissipation of heat from electrical equipment, or could be ignitible by abnormal operation or failure of electrical equipment.

Informational Note No. 1: The quantity of combustible dust that may be present and the adequacy of dust removal systems are factors that merit consideration in determining the classification and may result in an unclassified area.

Informational Note No. 2: Where products such as seed are handled in a manner that produces low quantities of dust, the amount of dust deposited may not warrant classification.

(D) Class III Locations.

Class III locations are those that are hazardous because of the presence of easily ignitible fibers or where materials producing combustible flyings are handled, manufactured, or used, but in which such fibers/flyings are not likely to be in suspension in the air in quantities sufficient to produce ignitible mixtures. Class III locations shall include those specified in 500.5(D)(1) and (D)(2).

(1) Class III, Division 1.

A Class III, Division 1 location is a location in which easily ignitible fibers/flyings are handled, manufactured, or used.

Informational Note No. 1: Such locations usually include some parts of rayon, cotton, and other textile mills; combustible fibers/flyings manufacturing and processing plants; cotton gins and cotton-seed mills; flax-processing plants; clothing manufacturing plants; woodworking plants; and establishments and industries involving similar hazardous processes or conditions.

Informational Note No. 2: Easily ignitible fibers/flyings include rayon, cotton (including cotton linters and cotton waste), sisal or henequen, istle, jute, hemp, tow, cocoa fiber, oakum, baled waste kapok, Spanish moss, excelsior, and other materials of similar nature.

(2) Class III, Division 2.

A Class III, Division 2 location is a location in which easily ignitible fibers/flyings are stored or handled other than in the process of manufacture.

500.6 Material Groups.

For purposes of testing, approval, and area classification, various air mixtures (not oxygen-enriched) shall be grouped in accordance with 500.6(A) and (B).

Exception: Equipment identified for a specific gas, vapor, dust, or fiber/flying.

Informational Note: This grouping is based on the characteristics of the materials. Facilities are available for testing and identifying equipment for use in the various atmospheric groups.

(A) Class I Group Classifications.

Class I groups shall be according to 500.6(A)(1) through (A)(4).

Informational Note No. 1: Informational Note Nos. 2 and 3 apply to 500.6(A).

Informational Note No. 2: The explosion characteristics of air mixtures of gases or vapors vary with the specific material involved. For Class I locations, Groups A, B, C, and D, the classification involves determinations of maximum explosion pressure and maximum safe clearance between parts of a clamped joint in an enclosure. It is necessary, therefore, that equipment be identified not only for class but also for the specific group of the gas or vapor that will be present.

Informational Note No. 3: Certain chemical atmospheres may have characteristics that require safeguards beyond those required for any of the Class I groups. Carbon disulfide is one of these chemicals because of its low autoignition temperature (90°C) and the small joint clearance permitted to arrest its flame.

(1) Group A.

Acetylene. [**497:**3.3.5.1.1]

(2) Group B.

Flammable gas, flammable liquid–produced vapor, or combustible liquid–produced vapor mixed with air that may burn or explode, having either a maximum experimental safe gap (MESG) value less than or equal to 0.45 mm or a minimum igniting current ratio (MIC ratio) less than or equal to 0.40. [**497:**3.3.5.1.2]

Informational Note: A typical Class I, Group B material is hydrogen.

Exception No. 1: Group D equipment shall be permitted to be used for atmospheres containing butadiene, provided all conduit runs into explosionproof equipment are provided with explosionproof seals installed within 450 mm (18 in.) of the enclosure.

Exception No. 2: Group C equipment shall be permitted to be used for atmospheres containing allyl glycidyl ether, n-butyl glycidyl ether, ethylene oxide, propylene oxide, and acrolein, provided all conduit runs into explosionproof equipment are provided with explosionproof seals installed within 450 mm (18 in.) of the enclosure.

(3) Group C.

Flammable gas, flammable liquid–produced vapor, or combustible liquid–produced vapor mixed with air that may burn or explode, having either a maximum experimental safe gap (MESG) value greater than 0.45 mm and less than or equal to 0.75 mm, or a minimum igniting current (MIC) ratio greater than 0.40 and less than or equal to 0.80. [**497:**3.3.5.1.3]

Informational Note: A typical Class I, Group C material is ethylene.

(4) Group D.

Flammable gas, flammable liquid–produced vapor, or combustible liquid–produced vapor mixed with air that may burn or explode, having either a maximum experimental safe gap (MESG) value greater than 0.75 mm or a minimum igniting current (MIC) ratio greater than 0.80. [**497:**3.3.5.1.4]

Informational Note No. 1: A typical Class I, Group D material is propane. [**497:**3.3.5.1.4]

Informational Note No. 2: For classification of areas involving ammonia atmospheres, see ANSI/ASHRAE 15-2016, *Safety Standard for Refrigeration Systems*.

(B) Class II Group Classifications.

Class II groups shall be in accordance with 500.6(B)(1) through (B)(3).

(1) Group E.

Atmospheres containing combustible metal dusts, including aluminum, magnesium, and their commercial alloys, or other combustible dusts whose particle size, abrasiveness, and conductivity present similar hazards in the use of electrical equipment. [**499:**3.3.4.1]

Informational Note: Certain metal dusts may have characteristics that require safeguards beyond those required for atmospheres containing the dusts of aluminum, magnesium, and their commercial alloys. For example, zirconium, thorium, and uranium dusts have extremely low ignition temperatures [as low as 20°C (68°F)] and minimum ignition energies lower than any material classified in any of the Class I or Class II groups.

(2) Group F.

Atmospheres containing combustible carbonaceous dusts that have more than 8 percent total entrapped volatiles (see ASTM D3175-2017, *Standard Test Method for Volatile Matter in the Analysis Sample of Coal and Coke*, for coal and coke dusts) or that have been sensitized by other materials so that they present an explosion hazard. [**499:**3.3.4.2] Coal, carbon black, charcoal, and coke dusts are examples of carbonaceous dusts. [**499:**A.3.3.4.2]

Informational Note: Testing of specific dust samples, following established ASTM testing procedures, is a method used to identify the combustibility of a specific dust and the need to classify those locations containing that material as Group F.

(3) Group G.

Atmospheres containing combustible dusts not included in Group E or Group F, including flour, grain, wood, plastic, and chemicals. [**499:**3.3.4.3]

Informational Note No. 1: For additional information on group classification of Class II materials, see NFPA 499-2017, *Recommended Practice for the Classification of Combustible Dusts and of Hazardous (Classified) Locations for Electrical Installations in Chemical Process Areas*.

Informational Note No. 2: The explosion characteristics of air mixtures of dust vary with the materials involved. For Class II locations, Groups E, F, and G, the classification involves the tightness of the joints of assembly and shaft openings to prevent the entrance of dust in the dust-ignitionproof enclosure, the blanketing effect of layers of dust on the equipment that may cause overheating, and the ignition temperature of the dust. It is necessary, therefore, that equipment be identified not only for the class but also for the specific group of dust that will be present.

Informational Note No. 3: Certain dusts may require additional precautions due to chemical phenomena that can result in the generation of ignitible gases. See ANSI/IEEE C2-2017, *National Electrical Safety Code*, Section 127A, Coal Handling Areas.

500.7 Protection Techniques.

Electrical and electronic equipment in hazardous (classified) locations shall be protected by one or more of the techniques in 500.7(A) through (P).

(A) Explosionproof Equipment.

This protection technique shall be permitted for equipment in Class I, Division 1 or 2 locations.

(B) Dust Ignitionproof.

This protection technique shall be permitted for equipment in Class II, Division 1 or 2 locations.

(C) Dusttight.

This protection technique shall be permitted for equipment in Class II, Division 2 or Class III, Division 1 or 2 locations.

(D) Purged and Pressurized.

This protection technique shall be permitted for equipment in any hazardous (classified) location for which it is identified.

(E) Intrinsic Safety.

This protection technique shall be permitted for equipment in Class I, Division 1 or 2; or Class II, Division 1 or 2; or Class III, Division 1 or 2 locations. The provisions of Articles 501 through 503 and Articles 510 through 516 shall not be considered applicable to such installations, except as required by Article 504, and installation of intrinsically safe apparatus and wiring shall be in accordance with the requirements of Article 504.

(F) Nonincendive Circuit.

This protection technique shall be permitted for equipment in Class I, Division 2; Class II, Division 2; or Class III, Division 1 or 2 locations.

(G) Nonincendive Equipment.

This protection technique shall be permitted for equipment in Class I, Division 2; Class II, Division 2; or Class III, Division 1 or 2 locations.

(H) Nonincendive Component.

This protection technique shall be permitted for equipment in Class I, Division 2; Class II, Division 2; or Class III, Division 1 or 2 locations.

(I) Oil Immersion.

This protection technique shall be permitted for current-interrupting contacts in Class I, Division 2 locations as described in 501.115(B)(1)(2).

(J) Hermetically Sealed.

This protection technique shall be permitted for equipment in Class I, Division 2; Class II, Division 2; or Class III, Division 1 or 2 locations.

(K) Combustible Gas Detection System.

A combustible gas detection system shall be permitted as a means of protection in industrial establishments with restricted public access and where the conditions of maintenance and supervision ensure that only qualified persons service the installation.

(1) General.

Any gas detection system utilized as a protection technique shall meet all of the requirements in 500.7(K)(1)(a) through (K)(1)(e).

(a) The gas detection equipment used shall be listed for Class I, Division 1 and listed for the detection of the specific gas or vapor to be encountered.

(b) The gas detection system shall not utilize portable or transportable equipment or temporary wiring methods.

(c) The gas detection system shall only use point-type sensors. The system shall be permitted to be augmented with open-path (line-of-sight)–type sensors, but open-path–type sensors shall not be the basis for this protection technique.

(d) The type of detection equipment, its listing, installation location(s), alarm and shutdown criteria, and calibration frequency shall be documented where combustible gas detectors are used as a protection technique.

(e) The applications for the use of combustible gas detection systems as a protection technique shall be limited to 500.7(K)(2), (K)(3), or (K)(4).

Informational Note No. 1: For further information, see ISA-TR12.13.03-2009, *Guide for Combustible Gas Detection as a Method of Protection*.

Informational Note No. 2: For further information, see ANSI/ISA-60079-29-1 (12.13.01)-2013, *Explosive Atmospheres — Part 29-1: Gas detectors — Performance requirements of detectors for flammable gases*.

Informational Note No. 3: For further information, see ANSI/API RP 500-2012, *Recommended Practice for Classification of Locations for Electrical Installations at Petroleum Facilities Classified as Class I, Division 1 and Division 2.*

Informational Note No. 4: For further information, see ANSI/ISA-60079-29-2 (12.13.02)-2012, *Explosive Atmospheres — Part 29-2: Gas detectors — Selection, installation, use and maintenance of detectors for flammable gases and oxygen*.

(2) Inadequate Ventilation.

A location, enclosed space, or building that is classified as a Class I, Division 1 location due to inadequate ventilation, that is provided with a combustible gas detection system shall be permitted to utilize electrical equipment, installation methods, and wiring practices suitable for Class I, Division 2 installations. Sensing a gas concentration of not more than 40 percent of the lower flammable limit or a gas detector system malfunction shall activate an alarm (audible or visual, or both, as most appropriate for the area).

(3) Interior of a Building or Enclosed Space.

Any building or enclosed space that does not contain a source of flammable gas or vapors that is located in, or with an opening into, a Class I, Division 2 hazardous (classified) location that is provided with a combustible gas detection system shall be permitted to utilize electrical equipment, installation methods, and wiring practices suitable for unclassified installations under all of the following conditions:

(1) An alarm (audible or visual, or both) shall be sounded at not more than 20 percent of the lower flammable limit.

(2) Sensing a gas concentration of not more than 40 percent of the lower flammable limit or a gas detector system malfunction shall both activate an alarm (audible or visual, or both, as most appropriate for the area) and initiate automatic disconnection of power from all electrical devices in the area that are not suitable for Class I, Division 2.

(3) The power disconnecting device(s) shall be suitable for Class I, Division 1 if located inside the building or enclosed space. If the disconnecting device(s) is located outside the building or enclosed space, it shall be suitable for the location in which it is installed.

Redundant or duplicate equipment (such as sensors) shall be permitted to be installed to avoid disconnecting electrical power when equipment malfunctions are indicated.

When automatic shutdown could introduce additional or increased hazard, this technique shall not be permitted.

(4) Interior of a Control Panel.

Inside the interior of a control panel containing instrumentation or other equipment utilizing or measuring flammable liquids, gases, or vapors, which is provided with combustible gas detection equipment shall be permitted to utilize electrical equipment, installation methods, and wiring practices suitable for Class I, Division 2 installations.

An alarm (audible or visual, or both) shall be sounded at not more than 40 percent of the lower flammable limit.

(L) Inherently Safe Optical Radiation “op is.”

This protection technique shall be permitted for equipment in Class I or II, Division 1 or 2 locations for which the equipment is identified.

> Informational Note: The identified class and division depends on the intended explosive atmosphere and the number of faults applied as part of the protection technique evaluation.

(M) Protected Optical Radiation “op pr.”

This protection technique shall be permitted for equipment in Class I or II, Division 2 locations for which the equipment is identified.

> Informational Note: The identified class and division depends on the intended explosive atmosphere as part of the protection technique evaluation.

(N) Optical System With Interlock “op sh.”

This protection technique shall be permitted for equipment in Class I or II, Division 1 or 2 locations for which the equipment is identified.

> Informational Note: The identified class and division depends on the intended explosive atmosphere and the number of faults applied as part of the protection technique evaluation.

(O) Protection by Skin Effect Trace Heating “IEEE 844.1”.

This protection technique shall be permitted for skin effect trace heating equipment in Class I, Division 2; Class II, Division 2; or Class III, Division 2 for which it is listed.

(P) Other Protection Techniques.

Other protection techniques used in equipment identified for use in hazardous (classified) locations.

500.8 Equipment.

Articles 500 through 504 require equipment construction and installation that ensure safe performance under conditions of proper use and maintenance.

Informational Note No. 1: It is important that inspection authorities and users exercise more than ordinary care with regard to installation and maintenance.

Informational Note No. 2: Since there is no consistent relationship between explosion properties and ignition temperature, the two are independent requirements.

Informational Note No. 3: Low ambient conditions require special consideration. Explosionproof or dust-ignitionproof equipment may not be suitable for use at temperatures lower than -25ºC (-13ºF) unless they are identified for low-temperature service. However, at low ambient temperatures, flammable concentrations of vapors may not exist in a location classified as Class I, Division 1 at normal ambient temperature.

(A) Suitability.

Suitability of identified equipment shall be determined by one of the following:

(1) Equipment listing or labeling

(2) Evidence of equipment evaluation from a qualified testing laboratory or inspection agency concerned with product evaluation

(3) Evidence acceptable to the authority having jurisdiction such as a manufacturer's self-evaluation or an owner's engineering judgment

Informational Note: Additional documentation for equipment may include certificates demonstrating compliance with applicable equipment standards, indicating special conditions of use, and other pertinent information. Guidelines for certificates may be found in ANSI/UL 120002-2014, *Certificate Standard for AEx Equipment for Hazardous (Classified) Locations*.

(B) Approval for Class and Properties.

(1)

Equipment shall be identified not only for the class of location but also for the explosive, combustible, or ignitible properties of the specific gas, vapor, dust, or fibers/flyings that will be present. In addition, Class I equipment shall not have any exposed surface that operates at a temperature in excess of the autoignition temperature of the specific gas or vapor. Class II equipment shall not have an external temperature higher than that specified in 500.8(D)(2). Class III equipment shall not exceed the maximum surface temperatures specified in 503.5.

Informational Note: Luminaires and other heat-producing apparatus, switches, circuit breakers, and plugs and receptacles are potential sources of ignition and are investigated for suitability in classified locations. Such types of equipment, as well as cable terminations for entry into explosionproof enclosures, are available as listed for Class I, Division 2 locations. Fixed wiring, however, may utilize wiring methods that are not evaluated with respect to classified locations. Wiring products such as cable, raceways, boxes, and fittings, therefore, are not marked as being suitable for Class I, Division 2 locations. Also see 500.8(C)(6)(a).

(2)

Equipment that has been identified for a Division 1 location shall be permitted in a Division 2 location of the same class, group, and temperature class and shall comply with 500.8(B)(2)(a) or (B)(2)(b) as applicable.

(a) Intrinsically safe apparatus having a control drawing requiring the installation of associated apparatus for a Division 1 installation shall be permitted to be installed in a Division 2 location if the same associated apparatus is used for the Division 2 installation.

(b) Equipment that is required to be explosionproof shall incorporate seals in accordance with 501.15(A) or (D) when the wiring methods of 501.10(B) are employed.

(3)

Where specifically permitted in Articles 501 through 503, general-purpose equipment or equipment in general-purpose enclosures shall be permitted to be installed in Division 2 locations if the equipment does not constitute a source of ignition under normal operating conditions.

(4)

Equipment that depends on a single compression seal, diaphragm, or tube to prevent flammable or combustible fluids from entering the equipment shall be identified for a Class I, Division 2 location even if installed in an unclassified location. Equipment installed in a Class I, Division 1 location shall be identified for the Class I, Division 1 location.

Informational Note: Equipment used for flow measurement is an example of equipment having a single compression seal, diaphragm, or tube.

(5)

Unless otherwise specified, normal operating conditions for motors shall be assumed to be rated full-load steady conditions.

(6)

Where flammable gases, flammable liquid–produced vapors, combustible liquid–produced vapors, or combustible dusts are or may be present at the same time, the simultaneous presence of both shall be considered when determining the safe operating temperature of the electrical equipment.

Informational Note: The characteristics of various atmospheric mixtures of gases, vapors, and dusts depend on the specific material involved.

(C) Marking.

Equipment shall be marked to show the environment for which it has been evaluated. Unless otherwise specified or allowed in 500.8(C)(6), the marking shall include the information specified in 500.8(C)(1) through (C)(5).

(1) Class.

The marking shall specify the class(es) for which the equipment is suitable.

(2) Division.

The marking shall specify the division if the equipment is suitable for Division 2 only. Equipment suitable for Division 1 shall be permitted to omit the division marking.

Informational Note: Equipment not marked to indicate a division, or marked “Division 1” or “Div. 1,” is suitable for both Division 1 and 2 locations; see 500.8(B)(2). Equipment marked “Division 2” or “Div. 2” is suitable for Division 2 locations only.

(3) Material Classification Group.

The marking shall specify the applicable material classification group(s) or specific gas, vapor, dust, or fiber/flying in accordance with 500.6.

Exception: Fixed luminaires marked for use only in Class I, Division 2 or Class II, Division 2 locations shall not be required to indicate the group.

Informational Note: A specific gas, vapor, dust, or fiber/flying is typically identified by the generic name, chemical formula, CAS number, or combination thereof.

(4) Equipment Temperature.

The marking shall specify the temperature class or operating temperature at a 40°C ambient temperature, or at the higher ambient temperature if the equipment is rated and marked for an ambient temperature of greater than 40°C. For equipment installed in a Class II, Division 1 location, the temperature class or operating temperature shall be based on operation of the equipment when blanketed with the maximum amount of dust that can accumulate on the equipment. The temperature class, if provided, shall be indicated using the temperature class (T codes) shown in Table 500.8(C). Equipment for Class I and Class II shall be marked with the maximum safe operating temperature, as determined by simultaneous exposure to the combinations of Class I and Class II conditions.

Table 500.8(C) Classification of Maximum Surface Temperature

Maximum Temperature		Temperature Class
°C	°F	(T Code)
450	842	T1
300	572	T2
280	536	T2A
260	500	T2B
230	446	T2C
215	419	T2D
200	392	T3
180	356	T3A
165	329	T3B
160	320	T3C
135	275	T4
120	248	T4A
100	212	T5
85	185	T6

Exception: Equipment of the non–heat-producing type, such as junction boxes, conduit, and fittings, and equipment of the heat-producing type having a maximum temperature not more than 100°C shall not be required to have a marked operating temperature or temperature class.

Informational Note: More than one marked temperature class or operating temperature, for gases and vapors, dusts, and different ambient temperatures, may appear.

(5) Ambient Temperature Range.

Electrical equipment designed for use in the ambient temperature range between –25°C to +40°C shall require no ambient temperature marking. For equipment rated for a temperature range other than –25°C to +40°C, the marking shall specify the special range of ambient temperatures in degrees Celsius. The marking shall include either the symbol “Ta” or “Tamb.”

Informational Note: As an example, such a marking might be “–30°C ≤ Ta ≤ +40°C.”

(6) Special Allowances.

(a) *General-Purpose Equipment.* Fixed general-purpose equipment in Class I locations, other than fixed luminaires, that is acceptable for use in Class I, Division 2 locations shall not be required to be marked with the class, division, group, temperature class, or ambient temperature range.

(b) *Dusttight Equipment.* Fixed dusttight equipment, other than fixed luminaires, that is acceptable for use in Class II, Division 2 and Class III locations shall not be required to be marked with the class, division, group, temperature class, or ambient temperature range.

(c) *Associated Apparatus.* Associated intrinsically safe apparatus and associated nonincendive field wiring apparatus that are not protected by an alternative type of protection shall not be marked with the class, division, group, or temperature class. Associated intrinsically safe apparatus and associated nonincendive field wiring apparatus shall be marked with the class, division, and group of the apparatus to which it is to be connected.

(d) *Simple Apparatus.* “Simple apparatus” as defined in Article 100 Part III, shall not be required to be marked with class, division, group, temperature class, or ambient temperature range.

(D) Temperature.

(1) Class I Temperature.

The temperature marking specified in 500.8(C) shall not exceed the autoignition temperature of the specific gas or vapor to be encountered.

Informational Note: For information regarding autoignition temperatures of gases and vapors, see NFPA 497-2017, *Recommended Practice for the Classification of Flammable Liquids, Gases, or Vapors and of Hazardous (Classified) Locations for Electrical Installations in Chemical Process Areas*.

(2) Class II Temperature.

The temperature marking specified in 500.8(C) shall be less than the ignition temperature of the specific dust to be encountered. For organic dusts that may dehydrate or carbonize, the temperature marking shall not exceed the lower of either the ignition temperature or 165°C (329°F).

Informational Note: See NFPA 499-2017, *Recommended Practice for the Classification of Combustible Dusts and of Hazardous (Classified) Locations for Electrical Installations in Chemical Process Areas*, for minimum ignition temperatures of specific dusts.

(E) Threading.

The supply connection entry thread form shall be NPT or metric. Conduit and fittings shall be made wrenchtight to prevent sparking when fault current flows through the conduit system, and to ensure the explosionproof integrity of the conduit system where applicable. Equipment provided with threaded entries for field wiring connections shall be installed in accordance with 500.8(E)(1) or (E)(2) and with (E)(3).

(1) Equipment Provided with Threaded Entries for NPT-Threaded Conduit or Fittings.

For equipment provided with threaded entries for NPT-threaded conduit or fittings, listed conduit, listed conduit fittings, or listed cable fittings shall be used. All NPT-threaded conduit and fittings shall be threaded with a National (American) Standard Pipe Taper (NPT) thread.

NPT-threaded entries into explosionproof equipment shall be made up with at least five threads fully engaged.

Exception: For listed explosionproof equipment, joints with factory-threaded NPT entries shall be made up with at least four and one-half threads fully engaged.

Informational Note No. 1: Thread specifications for male NPT threads are located in ASME B1.20.1-2013, *Pipe Threads, General Purpose (Inch)*.

Informational Note No. 2: Female NPT-threaded entries use a modified National Standard Pipe Taper (NPT) thread with thread form per ASME B1.20.1-2013, *Pipe Threads, General Purpose (Inch)*. See ANSI/UL 1203-2015, *Explosion-Proof and Dust-Ignition-Proof Electrical Equipment for Use in Hazardous (Classified) Locations*.

(2) Equipment Provided with Threaded Entries for Metric-Threaded Fittings.

For equipment with metric-threaded entries, listed conduit fittings or listed cable fittings shall be used. Such entries shall be identified as being metric, or listed adapters to permit connection to conduit or NPT-threaded fittings shall be provided with the equipment and shall be used for connection to conduit or NPT-threaded fittings.

Metric-threaded fittings installed into explosionproof equipment shall have a class of fit of at least 6g/6H and shall be made up with at least five threads fully engaged.

Informational Note: Threading specifications for metric-threaded entries are located in ISO 965-1-2013, *ISO general purpose metric screw threads — Tolerances — Part 1: Principles and basic data*, and ISO 965-3-2009, *ISO general purpose metric screw threads — Tolerances — Part 3: Deviations for constructional screw threads*.

(3) Unused Openings.

All unused openings shall be closed with listed metal close-up plugs. The plug engagement shall comply with 500.8(E)(1) or (E)(2).

(F) Optical Fiber Cables.

An optical fiber cable, with or without current-carrying conductors (composite optical fiber cable), shall be installed to address the associated fire hazard and sealed to address the associated explosion hazard in accordance with the requirements of Article 500, 501, 502, or 503, as applicable.

(G) Equipment Involving Optical Radiation.

For equipment involving sources of optical radiation (such as laser or LED sources) in the wavelength range from 380 nm to 10 µm, the risk of ignition from optical radiation shall be considered for all electrical parts and circuits that may be exposed to the radiation, both inside and outside the optical equipment. This includes optical equipment, which itself is located outside the explosive atmosphere, but its emitted optical radiation enters such atmospheres.

Informational Note: For additional information on types of protection that can be applied to minimize the risk of ignition in explosive atmospheres from optical radiation, see ANSI/UL 60079-28-2017, *Explosive Atmospheres — Part 28: Protection of Equipment and Transmission Systems Using Optical Radiation*.

Exception: All luminaires (fixed, portable, or transportable) and hand lights intended to be supplied by mains (with or without galvanic isolation) or powered by batteries, with any continuous divergent light source, including LEDs, shall be excluded from this requirement.

500.9 Specific Occupancies.

Articles 510 through 517 cover garages, aircraft hangars, motor fuel dispensing facilities, bulk storage plants, spray application, dipping and coating processes, and health care facilities.

Statement of Problem and Substantiation for Public Input

This proposal updates information from industry standards. It makes available the most up-to-date product and marking requirements and provides criteria to determine the suitability when utilized in industrial and commercial applications. The information should help provide electrical, mechanical durability such that in normal use its performance is reliable and poses no danger to the user or surroundings

Submitter Information Verification

Submitter Full Name: Ben Johnson
Organization: [Not Specified]
Affiliation: Thermon
Street Address:
City:
State:
Zip:
Submittal Date: Mon May 18 13:54:29 EDT 2020
Committee: NEC-P14

Committee Statement

Resolution: FR-8955-NFPA 70-2021

Statement: The additional language will help users of the Code understand that the documentation shall be available to the local AHJ as well as the contractors installing the equipment for all areas and locations that are classified or determined to be unclassified by the designer based on the protection provided. This proposed new information is critical to the enforcer and the installer. This first revision also updates the reference to IEEE 60079-30-2 to reflect the adoption as a joint IEC/IEEE standard. The reference to IEEE 844.3 was not accepted because it was inserted as a protection method and therefore only the application guides were included in the new Informational Note No. 8.

Public Input No. 3117-NFPA 70-2020 [Section No. 500.1]

500.1 Scope — Articles 500 Through 504.

Articles 500 through 504 cover the requirements for electrical and electronic equipment and wiring for all voltages in Class I, Divisions 1 and 2; Class II, Divisions 1 and 2; and Class III, Divisions 1 and 2 locations where fire or explosion hazards may exist due to flammable gases, flammable liquid–produced vapors, combustible liquid–produced vapors, combustible dusts, or ignitible fibers/flyings.

Informational Note

~~No. 1~~

:

~~The unique hazards associated with explosives, pyrotechnics, and blasting agents are not addressed in this article.~~

~~Informational Note No. 2: For the requirements for electrical and electronic equipment and wiring for all voltages in Zone 0, Zone 1, and Zone 2 hazardous (classified) locations where fire or explosion hazards may exist due to flammable gases or vapors or flammable liquids, refer to Article 505 .~~

~~Informational Note No. 3: For the requirements for electrical and electronic equipment and wiring for all voltages in Zone 20, Zone 21, and Zone 22 hazardous (classified) locations where fire or explosion hazards may exist due to combustible dusts or ignitible fibers/flyings, refer to Article 506 .~~

~~Informational Note No. 4:~~

Text that is followed by a reference in brackets has been extracted from NFPA 497-2017, *Recommended Practice for the Classification of Flammable Liquids, Gases, or Vapors and of Hazardous (Classified) Locations for Electrical Installations in Chemical Process Areas* , and NFPA 499-2017, *Recommended Practice for the Classification of Combustible Dusts and of Hazardous (Classified) Locations for Electrical Installation in Chemical Process Areas.* Only editorial changes were made to the extracted text to make it consistent with this *Code* .

Statement of Problem and Substantiation for Public Input

Informational Note No. 1 consists of a statement that excludes certain materials from the NEC. This information provides an interpretation and should not be in a note. The information would be delivered correctly by including it in the general information found in 500.5(A). Informational notes 2 and 3 are references to Articles 505 and 506. Quoting 90.1(A), This Code is not intended as a design specification or an instruction manual for untrained persons. Section 500.1 has 89 words and numbers while the four informational notes have a total of 113 words and numbers. The NEC should not have code sections that have more text dedicated to providing unenforceable language than is written to provide safety requirements.

Submitter Information Verification

Submitter Full Name: John Simmons

Organization: Florida East Coast JATC

Street Address:

City:

State:

Zip:

Submittal Date: Fri Sep 04 19:54:06 EDT 2020

Committee: NEC-P14

Committee Statement

Resolution: FR-8335-NFPA 70-2021

Statement: The current scope of 500.1 is actually the scope of the 5 articles, 500 through 504. The scope and several of the informational notes currently reference entire articles and are being rewritten to comply with Section 4.1.4 of the Style Manual. The informational note regarding explosives, pyrotechnics, and blasting agents, is relocated to the text of the scope as an exclusion as the unique hazards associated with these materials is not addressed in this Code. The remaining informational note is reworded to meet 3.1.3.1 of the NEC® Style Manual. CMP-14 notes that article scope statements are the responsibility of the Correlating Committee.

Public Input No. 4375-NFPA 70-2020 [Section No. 500.1]

500.1 Scope — Articles 500 Through 504.

Articles 500 through 504 cover the requirements for electrical and electronic equipment and wiring for all voltages in Class I, Divisions 1 and 2; Class II, Divisions 1 and 2; and Class III, Divisions 1 and 2 locations where fire or explosion hazards may exist due to flammable gases, flammable liquid–produced vapors, combustible liquid–produced vapors, combustible dusts, or ignitible fibers/flyings.

Informational Note No. 1: The unique hazards associated with explosives, pyrotechnics, and blasting agents are not addressed in this article.

Informational Note No. 2: ~~For~~ See 505.1 for the requirements for electrical and electronic equipment and wiring for all voltages in Zone 0, Zone 1, and Zone 2 hazardous (classified) locations where fire or explosion hazards may exist due to flammable gases or vapors or flammable liquids~~, refer to Article 505~~ .

Informational Note No. 3: ~~For~~ See 506.1 for the requirements for electrical and electronic equipment and wiring for all voltages in Zone 20, Zone 21, and Zone 22 hazardous (classified) locations where fire or explosion hazards may exist due to combustible dusts or ignitible fibers/flyings~~, refer to Article 506~~ .

Informational Note No. 4: Text that is followed by a reference in brackets has been extracted from NFPA 497-2017, *Recommended Practice for the Classification of Flammable Liquids, Gases, or Vapors and of Hazardous (Classified) Locations for Electrical Installations in Chemical Process Areas*, ~~and~~ or NFPA 499-2017, *Recommended Practice for the Classification of Combustible Dusts and of Hazardous (Classified) Locations for Electrical Installation in Chemical Process Areas.* Only editorial changes were made to the extracted text to make it consistent with this *Code*.

Statement of Problem and Substantiation for Public Input

Section 4.1.4 of the 2020 NEC(R) Style Manual prohibits references to an entire article, with the exception of Article 100. For the informational notes, pointing the user to the scope of the relevant article seems to correct this problem. It is not clear to me how to address the overall section title or beginning language to comply with the requirements. Finally, in informational note #4, it is noted that the text would have been extracted from one document or the other, not from both so the "and" was changed to an "or" to be grammatically correct.

Related Public Inputs for This Document

Related Input	Relationship
Public Input No. 4449-NFPA 70-2020 [Section No. 505.1]	

Submitter Information Verification

Submitter Full Name: Richard Holub
Organization: The DuPont Company, Inc.
Street Address:
City:
State:
Zip:

Submittal Date: Thu Sep 10 11:28:22 EDT 2020

Committee: NEC-P14

Committee Statement

Resolution: FR-8335-NFPA 70-2021

Statement: The current scope of 500.1 is actually the scope of the 5 articles, 500 through 504. The scope and several of the informational notes currently reference entire articles and are being rewritten to comply with Section 4.1.4 of the Style Manual. The informational note regarding explosives, pyrotechnics, and blasting agents, is relocated to the text of the scope as an exclusion as the unique hazards associated with these materials is not addressed in this Code. The remaining informational note is reworded to meet 3.1.3.1 of the NEC® Style Manual. CMP-14 notes that article scope statements are the responsibility of the Correlating Committee.

Public Input No. 4385-NFPA 70-2020 [Section No. 500.3]

~~**500.3** Other Articles.~~

~~Except as modified in Articles 500 through 504 , all other applicable rules contained in this *Code* shall apply to electrical equipment and wiring installed in hazardous (classified) locations.~~

Statement of Problem and Substantiation for Public Input

Section 4.1.4 of the 2020 NEC(r) Style Manual prohibits references to an entire article, with the exception of Article 100. Section 90.3 makes the code arrangement clear and this section doesn't change that so it appears to be unnecessary in the usability or enforcement of the Code.

Related Public Inputs for This Document

Related Input	Relationship
Public Input No. 4455-NFPA 70-2020 [Section No. 505.3]	
Public Input No. 4482-NFPA 70-2020 [Section No. 506.3]	

Submitter Information Verification

Submitter Full Name: Richard Holub
Organization: The DuPont Company, Inc.
Street Address:
City:
State:
Zip:
Submittal Date: Thu Sep 10 11:35:09 EDT 2020
Committee: NEC-P14

Committee Statement

Resolution: FR-8337-NFPA 70-2021
Statement: Section 4.1.4 of the 2020 NEC® Style Manual prohibits references to an entire article, with the exception of Article 100. Section 90.3 makes the code arrangement clear.

Public Input No. 1124-NFPA 70-2020 [Section No. 500.4]

500.4 Documentation.

All areas designated as hazardous (classified) locations shall be properly documented. This documentation shall be available to those authorized to design, install, inspect, maintain, or operate electrical equipment at the location.

Informational Note No. 1: For further information on the classification of locations, see NFPA 30-2018, *Flammable and Combustible Liquids Code*; NFPA 32-2016, *Standard for Drycleaning Facilities*; NFPA 33-2018, *Standard for Spray Application Using Flammable or Combustible Materials*; NFPA 34-2018, *Standard for Dipping, Coating and Printing Processes Using Flammable or Combustible Liquids*; NFPA 35-2016, *Standard for the Manufacture of Organic Coatings*; NFPA 36-2017, *Standard for Solvent Extraction Plants*; NFPA 45-2019, *Standard on Fire Protection for Laboratories Using Chemicals*; NFPA 55-2016, *Compressed Gases and Cryogenic Fluids Code*; NFPA 58-2017, *Liquefied Petroleum Gas Code*; NFPA 59-2018, *Utility LP-Gas Plant Code*; NFPA 497-2017, *Recommended Practice for the Classification of Flammable Liquids, Gases, or Vapors and of Hazardous (Classified) Locations for Electrical Installations in Chemical Process Areas*; NFPA 499-2017, *Recommended Practice for the Classification of Combustible Dusts and of Hazardous (Classified) Locations for Electrical Installations in Chemical Process Areas*; NFPA 820-2016, *Standard for Fire Protection in Wastewater Treatment and Collection Facilities*; ANSI/API RP 500-2012, *Recommended Practice for Classification of Locations of Electrical Installations at Petroleum Facilities Classified as Class I, Division 1 and Division 2*; and ISA-12.10-1988, *Area Classification in Hazardous (Classified) Dust Locations*.

Informational Note No. 2: For further information on protection against static electricity and lightning hazards in hazardous (classified) locations, see NFPA 77-2019, *Recommended Practice on Static Electricity*; NFPA 780-2017, *Standard for the Installation of Lightning Protection Systems*; and API RP 2003-2015, *Protection Against Ignitions Arising Out of Static Lightning and Stray Currents*.

Informational Note No. 3: For further information on ventilation, see NFPA 30-2018, *Flammable and Combustible Liquids Code*; and ANSI/API RP 500-2012, *Recommended Practice for Classification of Locations for Electrical Installations at Petroleum Facilities Classified as Class I, Division 1 and Division 2*.

Informational Note No. 4: For further information on electrical systems for hazardous (classified) locations on offshore oil- and gas-producing platforms, drilling rigs, and workover rigs, see ANSI/API RP 14F-2018, *Recommended Practice for Design and Installation of Electrical Systems for Fixed and Floating Offshore Petroleum Facilities for Unclassified and Class I, Division 1 and Division 2 Locations*.

Informational Note No. 5: Portable or transportable equipment having self-contained power supplies, such as battery-operated equipment, could potentially become an ignition source in hazardous (classified) locations. See ANSI/UL 121203-2011, *Standard for Portable Electronic Products Suitable for Use in Class I and II, Division 2, Class I Zone 2 and Class III, Division 1 and 2 Hazardous (Classified) Locations*.

Informational Note No. 6: For information on electrical resistance trace heating for hazardous (classified) locations, see ANSI/UL 60079-30-1-2017, *Explosive Atmospheres — Electrical Resistance Trace Heating — General and Testing Requirements*, and ~~ANSI~~ IEC /IEEE 60079-30-2-2015, *IEEE/IEC International Standard for Explosive atmospheres — Part 30-2: Electrical resistance trace heating — Application guide for design, installation, and maintenance*.

Informational Note No. 7: For information on electric skin effect trace heating for hazardous (classified) locations, see IEEE 844.1-2017/CSA C22.2 No. 293.1-17, *IEEE/CSA Standard for Skin Effect Trace Heating of Pipelines, Vessels, Equipment, and Structures — General, Testing, Marking, and Documentation Requirements*, and IEEE 844.2-2017/CSA C293.2-17, *IEEE/CSA Standard for Skin Effect Trace Heating of Pipelines, Vessels, Equipment, and Structures — Application Guide for Design, Installation, Testing, Commissioning, and Maintenance*.

Informational Note No.8: For information on electric impedance heating for hazardous (classified) locations, see *IEEE 844.3/CSA C22.2 No.293.3 :19, Standard for Impedance Heating of Pipelines and Equipment - General, Testing, Marking, and*

Documentation Requirements and *IEEE 844.4/CSA C293.4 :19,Standard for Impedance Heating of Pipelines and Equipment - Application Guide for Design, Installation, Testing, Commissioning, and Maintenance* .

Statement of Problem and Substantiation for Public Input

This proposal updates information from industry standards. It makes available the most up-to-date product and marking requirements and provides criteria to determine the suitability when utilized in industrial and commercial applications. The information should help provide electrical, mechanical durability such that in normal use its performance is reliable and poses no danger to the user or surroundings

Submitter Information Verification

Submitter Full Name: Ben Johnson
Organization: [Not Specified]
Affiliation: Thermon
Street Address:
City:
State:
Zip:
Submittal Date: Mon May 18 12:34:12 EDT 2020
Committee: NEC-P14

Committee Statement

Resolution: FR-8955-NFPA 70-2021

Statement: The additional language will help users of the Code understand that the documentation shall be available to the local AHJ as well as the contractors installing the equipment for all areas and locations that are classified or determined to be unclassified by the designer based on the protection provided. This proposed new information is critical to the enforcer and the installer. This first revision also updates the reference to IEEE 60079-30-2 to reflect the adoption as a joint IEC/IEEE standard. The reference to IEEE 844.3 was not accepted because it was inserted as a protection method and therefore only the application guides were included in the new Informational Note No. 8.

Public Input No. 2248-NFPA 70-2020 [Section No. 500.4]

500.4 Documentation.

All areas designated as hazardous (classified) locations shall be properly documented. This documentation shall be available to those authorized to design, install, inspect, maintain, or operate electrical equipment at the location.

Informational Note No. 1: For further information on the classification of locations, see NFPA 30-2018, *Flammable and Combustible Liquids Code*; NFPA 32-2016, *Standard for Drycleaning Facilities*; NFPA 33-2018, *Standard for Spray Application Using Flammable or Combustible Materials*; NFPA 34-2018, *Standard for Dipping, Coating and Printing Processes Using Flammable or Combustible Liquids*; NFPA 35-2016, *Standard for the Manufacture of Organic Coatings*; NFPA 36-2017, *Standard for Solvent Extraction Plants*; NFPA 45-2019, *Standard on Fire Protection for Laboratories Using Chemicals*; NFPA 55-2016, *Compressed Gases and Cryogenic Fluids Code*; NFPA 58-2017, *Liquefied Petroleum Gas Code*; NFPA 59-2018, *Utility LP-Gas Plant Code*; NFPA 497-2017, *Recommended Practice for the Classification of Flammable Liquids, Gases, or Vapors and of Hazardous (Classified) Locations for Electrical Installations in Chemical Process Areas*; NFPA 499-2017, *Recommended Practice for the Classification of Combustible Dusts and of Hazardous (Classified) Locations for Electrical Installations in Chemical Process Areas*; NFPA 820-2016, *Standard for Fire Protection in Wastewater Treatment and Collection Facilities*; ANSI/API RP 500-2012, *Recommended Practice for Classification of Locations of Electrical Installations at Petroleum Facilities Classified as Class I, Division 1 and Division 2*; and ISA-12.10-1988, *Area Classification in Hazardous (Classified) Dust Locations*.

Informational Note No. 2: For further information on protection against static electricity and lightning hazards in hazardous (classified) locations, see NFPA 77-2019, *Recommended Practice on Static Electricity*; NFPA 780-2017, *Standard for the Installation of Lightning Protection Systems*; and API RP 2003-2015, *Protection Against Ignitions Arising Out of Static Lightning and Stray Currents*.

Informational Note No. 3: For further information on ventilation, see NFPA 30-2018, *Flammable and Combustible Liquids Code*; and ANSI/API RP 500-2012, *Recommended Practice for Classification of Locations for Electrical Installations at Petroleum Facilities Classified as Class I, Division 1 and Division 2*.

Informational Note No. 4: For further information on electrical systems for hazardous (classified) locations on offshore oil- and gas-producing platforms, drilling rigs, and workover rigs, see ANSI/API RP 14F-2018, *Recommended Practice for Design and Installation of Electrical Systems for Fixed and Floating Offshore Petroleum Facilities for Unclassified and Class I, Division 1 and Division 2 Locations*.

Informational Note No. 5: Portable or transportable equipment having self-contained power supplies, such as battery-operated equipment, could potentially become an ignition source in hazardous (classified) locations. See ANSI/UL 121203-2011, *Standard for Portable Electronic Products Suitable for Use in Class I and II, Division 2, Class I Zone 2 and Class III, Division 1 and 2 Hazardous (Classified) Locations*.

Informational Note No. 6: For information on electrical resistance trace heating for hazardous (classified) locations, see ANSI/UL 60079-30-1-2017, *Explosive Atmospheres — Electrical Resistance Trace Heating — General and Testing Requirements*, and ANSI/IEEE 60079-30-2-2015, *IEEE/IEC International Standard for Explosive atmospheres — Part 30-2: Electrical resistance trace heating — Application guide for design, installation, and maintenance*.

Informational Note No. 7: For information on electric skin effect trace heating for hazardous (classified) locations, see IEEE 844.1-2017/CSA C22.2 No. 293.1-17, *IEEE/CSA Standard for Skin Effect Trace Heating of Pipelines, Vessels, Equipment, and Structures — General, Testing, Marking, and Documentation Requirements*, and IEEE 844.2-2017/CSA C293.2-17, *IEEE/CSA Standard for Skin Effect Trace Heating of Pipelines, Vessels, Equipment, and Structures — Application Guide for Design, Installation, Testing, Commissioning, and Maintenance*.

Informational Note No.8 :For information on electric impedance heating, see *IEEE 844.3-2019/CSA C22.2 No.293.3 : 19, IEEE/CSA Standard for Impedance Heating of Pipelines and Equipment - General, Testing, Marking, and Documentation*

Requirements and *IEEE 844.4-2019/CSA C293.4 :19,Standard for Impedance Heating of Pipelines and Equipment - Application Guide for Design, Installation, Testing, Commissioning, and Maintenance.*

Statement of Problem and Substantiation for Public Input

This proposal updates information from industry standards. It makes available the most up-to-date product and marking requirements and provides criteria to determine the suitability when utilized in industrial and commercial applications. The information should help provide electrical, mechanical durability such that in normal use its performance is reliable and poses no danger to the user or surroundings

Submitter Information Verification

Submitter Full Name: Ben Johnson
Organization: [Not Specified]
Affiliation: Thermon
Street Address:
City:
State:
Zip:
Submittal Date: Wed Aug 12 12:37:45 EDT 2020
Committee: NEC-P14

Committee Statement

Resolution: FR-8955-NFPA 70-2021

Statement: The additional language will help users of the Code understand that the documentation shall be available to the local AHJ as well as the contractors installing the equipment for all areas and locations that are classified or determined to be unclassified by the designer based on the protection provided. This proposed new information is critical to the enforcer and the installer. This first revision also updates the reference to IEEE 60079-30-2 to reflect the adoption as a joint IEC/IEEE standard. The reference to IEEE 844.3 was not accepted because it was inserted as a protection method and therefore only the application guides were included in the new Informational Note No. 8.

Public Input No. 3509-NFPA 70-2020 [Section No. 500.4]

500.4 Documentation.

All areas designated as hazardous (classified) locations or unclassifed locations due to design, recognized protection techniques, or safe guards provided shall be properly documented. This documentation shall be available to those authorized to design, install, inspect, maintain, or operate electrical equipment at the location.

Informational Note No. 1: For further information on the classification of locations, see NFPA 30-2018, *Flammable and Combustible Liquids Code*; NFPA 32-2016, *Standard for Drycleaning Facilities*; NFPA 33-2018, *Standard for Spray Application Using Flammable or Combustible Materials*; NFPA 34-2018, *Standard for Dipping, Coating and Printing Processes Using Flammable or Combustible Liquids*; NFPA 35-2016, *Standard for the Manufacture of Organic Coatings*; NFPA 36-2017, *Standard for Solvent Extraction Plants*; NFPA 45-2019, *Standard on Fire Protection for Laboratories Using Chemicals*; NFPA 55-2016, *Compressed Gases and Cryogenic Fluids Code*; NFPA 58-2017, *Liquefied Petroleum Gas Code*; NFPA 59-2018, *Utility LP-Gas Plant Code*; NFPA 497-2017, *Recommended Practice for the Classification of Flammable Liquids, Gases, or Vapors and of Hazardous (Classified) Locations for Electrical Installations in Chemical Process Areas*; NFPA 499-2017, *Recommended Practice for the Classification of Combustible Dusts and of Hazardous (Classified) Locations for Electrical Installations in Chemical Process Areas*; NFPA 820-2016, *Standard for Fire Protection in Wastewater Treatment and Collection Facilities*; ANSI/API RP 500-2012, *Recommended Practice for Classification of Locations of Electrical Installations at Petroleum Facilities Classified as Class I, Division 1 and Division 2*; and ISA-12.10-1988, *Area Classification in Hazardous (Classified) Dust Locations*.

Informational Note No. 2: For further information on protection against static electricity and lightning hazards in hazardous (classified) locations, see NFPA 77-2019, *Recommended Practice on Static Electricity*; NFPA 780-2017, *Standard for the Installation of Lightning Protection Systems*; and API RP 2003-2015, *Protection Against Ignitions Arising Out of Static Lightning and Stray Currents*.

Informational Note No. 3: For further information on ventilation, see NFPA 30-2018, *Flammable and Combustible Liquids Code*; and ANSI/API RP 500-2012, *Recommended Practice for Classification of Locations for Electrical Installations at Petroleum Facilities Classified as Class I, Division 1 and Division 2*.

Informational Note No. 4: For further information on electrical systems for hazardous (classified) locations on offshore oil- and gas-producing platforms, drilling rigs, and workover rigs, see ANSI/API RP 14F-2018, *Recommended Practice for Design and Installation of Electrical Systems for Fixed and Floating Offshore Petroleum Facilities for Unclassified and Class I, Division 1 and Division 2 Locations*.

Informational Note No. 5: Portable or transportable equipment having self-contained power supplies, such as battery-operated equipment, could potentially become an ignition source in hazardous (classified) locations. See ANSI/UL 121203-2011, *Standard for Portable Electronic Products Suitable for Use in Class I and II, Division 2, Class I Zone 2 and Class III, Division 1 and 2 Hazardous (Classified) Locations*.

Informational Note No. 6: For information on electrical resistance trace heating for hazardous (classified) locations, see ANSI/UL 60079-30-1-2017, *Explosive Atmospheres — Electrical Resistance Trace Heating — General and Testing Requirements*, and ANSI/IEEE 60079-30-2-2015, *IEEE/IEC International Standard for Explosive atmospheres — Part 30-2: Electrical resistance trace heating — Application guide for design, installation, and maintenance*.

Informational Note No. 7: For information on electric skin effect trace heating for hazardous (classified) locations, see IEEE 844.1-2017/CSA C22.2 No. 293.1-17, *IEEE/CSA Standard for Skin Effect Trace Heating of Pipelines, Vessels, Equipment, and Structures — General, Testing, Marking, and Documentation Requirements*, and IEEE 844.2-2017/CSA C293.2-17, *IEEE/CSA Standard for Skin Effect Trace Heating of Pipelines, Vessels, Equipment, and Structures — Application Guide for Design, Installation, Testing, Commissioning, and Maintenance*.

Statement of Problem and Substantiation for Public Input

The additional language will help users of the Code understand that the documentation shall be available to the local AHJ as well as the contractors installing the equipment for all areas and locations that are classified or unclassified by the Designer based on the protection provided such as air changes per Article 511 in an automotive repair
garage per Tables 511.3(C) and 511.3(D). If an area is unclassified due to a technique like air changes, it is imperative to maintain that technique at all times. This proposed new information is critical to the enforcer and the installer.

Submitter Information Verification

Submitter Full Name: Rudolph Garza
Organization: IAEI
Affiliation: IAEI
Street Address:
City:
State:
Zip:
Submittal Date: Tue Sep 08 19:08:27 EDT 2020
Committee: NEC-P14

Committee Statement

Resolution: FR-8955-NFPA 70-2021

Statement: The additional language will help users of the Code understand that the documentation shall be available to the local AHJ as well as the contractors installing the equipment for all areas and locations that are classified or determined to be unclassified by the designer based on the protection provided. This proposed new information is critical to the enforcer and the installer. This first revision also updates the reference to IEEE 60079-30-2 to reflect the adoption as a joint IEC/IEEE standard. The reference to IEEE 844.3 was not accepted because it was inserted as a protection method and therefore only the application guides were included in the new Informational Note No. 8.

Public Input No. 662-NFPA 70-2020 [Section No. 500.4]

500.4 Documentation.

All areas designated as hazardous (classified) locations shall be properly documented. This documentation shall be available to those authorized to design, install, inspect, maintain, or operate electrical equipment at the location.

Informational Note No. 1: For further information on the classification of locations, see NFPA 30-2018, *Flammable and Combustible Liquids Code*; NFPA 32-2016, *Standard for Drycleaning Facilities*; NFPA 33-2018, *Standard for Spray Application Using Flammable or Combustible Materials*; NFPA 34-2018, *Standard for Dipping, Coating and Printing Processes Using Flammable or Combustible Liquids*; NFPA 35-2016, *Standard for the Manufacture of Organic Coatings*; NFPA 36-2017, *Standard for Solvent Extraction Plants*; NFPA 45-2019, *Standard on Fire Protection for Laboratories Using Chemicals*; NFPA 55-2016, *Compressed Gases and Cryogenic Fluids Code*; NFPA 58-2017, *Liquefied Petroleum Gas Code*; NFPA 59-2018, *Utility LP-Gas Plant Code*; NFPA 497-2017, *Recommended Practice for the Classification of Flammable Liquids, Gases, or Vapors and of Hazardous (Classified) Locations for Electrical Installations in Chemical Process Areas*; NFPA 499-2017, *Recommended Practice for the Classification of Combustible Dusts and of Hazardous (Classified) Locations for Electrical Installations in Chemical Process Areas*; NFPA 820-2016, *Standard for Fire Protection in Wastewater Treatment and Collection Facilities*; ANSI/API RP 500-2012, *Recommended Practice for Classification of Locations of Electrical Installations at Petroleum Facilities Classified as Class I, Division 1 and Division 2*; and ISA-12.10-1988, *Area Classification in Hazardous (Classified) Dust Locations*.

Informational Note No. 2: For further information on protection against static electricity and lightning hazards in hazardous (classified) locations, see NFPA 77-2019, *Recommended Practice on Static Electricity*; NFPA 780-2017, *Standard for the Installation of Lightning Protection Systems*; and API RP 2003-2015, *Protection Against Ignitions Arising Out of Static Lightning and Stray Currents*.

Informational Note No. 3: For further information on ventilation, see NFPA 30-2018, *Flammable and Combustible Liquids Code*; and ANSI/API RP 500-2012, *Recommended Practice for Classification of Locations for Electrical Installations at Petroleum Facilities Classified as Class I, Division 1 and Division 2*.

Informational Note No. 4: For further information on electrical systems for hazardous (classified) locations on offshore oil- and gas-producing platforms, drilling rigs, and workover rigs, see ANSI/API RP 14F-2018, *Recommended Practice for Design and Installation of Electrical Systems for Fixed and Floating Offshore Petroleum Facilities for Unclassified and Class I, Division 1 and Division 2 Locations*.

Informational Note No. 5: Portable or transportable equipment having self-contained power supplies, such as battery-operated equipment, could potentially become an ignition source in hazardous (classified) locations. See ANSI/UL 121203-2011, *Standard for Portable Electronic Products Suitable for Use in Class I and II, Division 2, Class I Zone 2 and Class III, Division 1 and 2 Hazardous (Classified) Locations*.

Informational Note No. 6: For information on electrical resistance trace heating for hazardous (classified) locations, see ANSI/UL 60079-30-1-2017, *Explosive Atmospheres — Electrical Resistance Trace Heating — General and Testing Requirements*, and ANSI/IEEE 60079-30-2-2015, *IEEE/IEC International Standard for Explosive atmospheres — Part 30-2: Electrical resistance trace heating — Application guide for design, installation, and maintenance*.

Informational Note No. 7: For information on electric skin effect trace heating for hazardous (classified) locations, see IEEE 844.1-2017/CSA C22.2 No. 293.1-17, *IEEE/CSA Standard for Skin Effect Trace Heating of Pipelines, Vessels, Equipment, and Structures — General, Testing, Marking, and Documentation Requirements*, and IEEE 844.2-2017/CSA C293.2-17, *IEEE/CSA Standard for Skin Effect Trace Heating of Pipelines, Vessels, Equipment, and Structures — Application Guide for Design, Installation, Testing, Commissioning, and Maintenance*.

Informational Note No. 8: For information on fuel-burning equipment, see NFPA 37-2018, *Standard for the Installation and Use of Stationary Combustion Engines and Gas Turbines* , and NFPA 86-2019, *Standard for Ovens and Furnaces* .

Statement of Problem and Substantiation for Public Input

NFPA 37 Clause 4.5.2 and NFPA 86 Clause 4.1.3.4 provide specific guidance that the installation of the respective equipment with the associated fuel and accessory combustible fluids does not necessarily require the space around the equipment to be declared as "hazardous". The annex material to NFPA 86 Clause 4.1.3.4 provides additional insight into the rationale for this by pointing out "The primary source of ignition associated with an oven installation is the oven heating system or equipment or the materials heated. The presence of these ignition sources precludes the need for imposing requirements for wiring methods appropriate for a hazardous (classified) location."

NFPA 497 Clause 5.5.3 provides additional commentary regarding not declaring the space around this type of equipment as "hazardous" stating "Open flames and hot surfaces associated with the operation of certain equipment, such as boilers and fired heaters, provide inherent thermal ignition sources. Electrical classification is not appropriate in the immediate vicinity of these facilities."

Submitter Information Verification

Submitter Full Name: Larry Danner
Organization: GE Power & Water
Street Address:
City:
State:
Zip:
Submittal Date: Mon Mar 16 11:40:25 EDT 2020
Committee: NEC-P14

Committee Statement

Resolution: Area classification involving fuel gas systems is a function of volume and pressure as stated in NFPA 497. The substantiation does not state why NFPA fuel burning codes need to be referenced in 500.4 of the NEC.

Public Input No. 1545-NFPA 70-2020 [Section No. 500.5(A)]

(A) General.

Locations shall be classified depending on the properties of the flammable gas, flammable liquid–produced vapor, combustible liquid–produced vapors, combustible dusts, or fibers/flyings that could be present, and the likelihood that a flammable or combustible concentration or quantity is present. Each room, section, or area shall be considered individually in determining its classification. Where pyrophoric materials are the only materials used or handled, these locations are outside the scope of this article. The unique hazards associated with explosives, pyrotechnics, and blasting agents are not addressed in this Article.

Informational Note: Through the exercise of ingenuity in the layout of electrical installations for hazardous (classified) locations, it is frequently possible to locate much of the equipment in a reduced level of classification or in an unclassified location and, thus, to reduce the amount of special equipment required.

Refrigerant machinery rooms that contain ammonia refrigeration systems and are equipped ~~with adequate mechanical~~ with mechanical ventilation that operates continuously or is initiated by a detection system at a concentration not exceeding 150 ppm shall be permitted to be classified as “unclassified” locations.

Informational Note: For further information regarding classification and ventilation of areas involving closed-circuit ammonia refrigeration systems, see ANSI/IIAR 2-2014, *Standard for Safe Design of Closed-Circuit Ammonia Refrigeration Systems*.

_____

Statement of Problem and Substantiation for Public Input

The term adequate is found in Table 3.2.1 of the 2015 NEC Style Manual and is considered an unenforceable term. The term is not needed in the paragraph. The ventilation system would be designed by a mechanical engineer which should meet the requirement to initiate the mechanical ventilation system. Information Note No. 1 for 500.1 is relocated to this section to make it enforceable.

Submitter Information Verification

Submitter Full Name: John Simmons
Organization:
Affiliation: IBEW LU 728
Street Address:
City:
State:
Zip:
Submittal Date: Tue Jun 16 12:24:22 EDT 2020
Committee: NEC-P14

Committee Statement

Resolution: The scope of Article 500 has been revised to include the language of the informational note. “Adequate mechanical ventilation” is a defined term in other standards and should remain.

Public Input No. 4176-NFPA 70-2020 [Section No. 500.5(A)]

(A) General.

Locations shall be classified depending on the properties of the flammable gas, flammable liquid–produced vapor, combustible liquid–produced vapors, combustible dusts, or fibers/flyings that could be present, and the likelihood that a flammable or combustible concentration or quantity is present. Each room, section, or area shall be considered individually in determining its classification. Where pyrophoric materials are the only materials used or handled, these locations are outside the scope of this article.

Informational Note: Through the exercise of ingenuity in the layout of electrical installations for hazardous (classified) locations, it is frequently possible to locate much of the equipment in a reduced level of classification or in an unclassified location and, thus, to reduce the amount of special equipment required.

~~Refrigerant machinery rooms~~ Industrial locations that contain ammonia ~~refrigeration~~ systems and are equipped with adequate mechanical ventilation that operates continuously or is initiated by a detection system at a concentration not exceeding 150 ppm shall be permitted to be classified as “unclassified” locations.

Informational Note: For further information regarding classification and ventilation of areas involving closed-circuit ammonia refrigeration systems, see ANSI/IIAR 2-2014, *Standard for Safe Design of Closed-Circuit Ammonia Refrigeration Systems*.

Statement of Problem and Substantiation for Public Input

Anhydrous ammonia systems are not confined to refrigeration. Water treatment plans use ammonia in place of Chlorine to purify drinking water. These applications would benefit enormously from the type of accommodation now made for refrigeration. The purpose for which the ammonia is put should not be what governs the protection provided; rather the protection should be based on the chemistry of ammonia and the provision of appropriate instrumentation. Ammonia is impossible to ignite at concentrations in air remotely tolerable by persons. The likely detection of any leakage at an early stage and the readily available automatic detection equipment available today make this expansion of the existing provisions for refrigeration feasible.

Submitter Information Verification

Submitter Full Name: Frederic Hartwell
Organization: Hartwell Electrical Services, Inc.
Affiliation: self
Street Address:
City:
State:
Zip:
Submittal Date: Wed Sep 09 23:45:30 EDT 2020
Committee: NEC-P14

Committee Statement

Resolution: This section is specific to refrigeration systems per the standard referenced in the informational note, The same rules do not apply universally to all other anhydrous

ammonia applications.

Public Input No. 4397-NFPA 70-2020 [Section No. 500.5(B)(1)]

(1) Class I, Division 1.

A Class I, Division 1 location is a location:

(1) In which ignitible concentrations of flammable gases, flammable liquid–produced vapors, or combustible liquid–produced vapors can exist under normal operating conditions, or

(2) In which ignitible concentrations of such flammable gases, flammable liquid–produced vapors, or combustible liquids above their flash points may exist frequently because of repair or maintenance operations or because of leakage, or

(3) In which breakdown or faulty operation of equipment or processes might release ignitible concentrations of flammable gases, flammable liquid–produced vapors, or combustible liquid–produced vapors and might also cause simultaneous failure of electrical equipment in such a way as to directly cause the electrical equipment to become a source of ignition

Informational Note No. 1: This classification usually includes the following locations:

(1) Where volatile flammable liquids or liquefied flammable gases are transferred from one container to another

(2) Interiors of spray booths and areas in the vicinity of spraying and painting operations where volatile flammable solvents are used

(3) Locations containing open tanks or vats of volatile flammable liquids

(4) Drying rooms or compartments for the evaporation of flammable solvents

(5) Locations containing fat- and oil-extraction equipment using volatile flammable solvents

(6) Portions of cleaning and dyeing plants where flammable liquids are used

(7) Gas generator rooms and other portions of gas manufacturing plants where flammable gas may escape

(8) Inadequately ventilated pump rooms for flammable gas or for volatile flammable liquids

(9) The interiors of refrigerators and freezers in which volatile flammable materials are stored in open, lightly stoppered, or easily ruptured containers

(10) All other locations where ignitible concentrations of flammable vapors or gases are likely to occur in the course of normal operations

Informational Note No. 2: - See 504.1. In some Division 1 locations, ignitible concentrations of flammable gases or vapors may be present continuously or for long periods of time. Examples include the following:

(1) The inside of inadequately vented enclosures containing instruments normally venting flammable gases or vapors to the interior of the enclosure

(2) The inside of vented tanks containing volatile flammable liquids

(3) The area between the inner and outer roof sections of a floating roof tank containing volatile flammable fluids

(4) Inadequately ventilated areas within spraying or coating operations using volatile flammable fluids

(5) The interior of an exhaust duct that is used to vent ignitible concentrations of gases or vapors

Experience has demonstrated the prudence of avoiding the installation of instrumentation or other electrical equipment in these particular areas altogether- ~~or where~~ . Where it cannot be avoided because it is essential to the process and other locations are not feasible [see 500.5(A), Informational Note], using electrical equipment or instrumentation approved for the specific application or consisting of intrinsically safe systems ~~as described in Article~~ 504 is often the solution .

Statement of Problem and Substantiation for Public Input

Section 4.1.4 of the 2020 NEC(r) Style Manual prohibits references to an entire article, with the exception of Article 100. Informational Note #2 was revised to point users to the scope of the Intrinsically Safe Systems Article vs. the entire article. In addition, it is recommended that the last sentence be broken into two for usability and being careful not to make a recommendation in an Informational Note. The reference to Section 504.1 was inserted at the beginning of the Informational Note to comply with Section 4.1.3 of the new Style Manual.

Submitter Information Verification

Submitter Full Name: Richard Holub
Organization: The DuPont Company, Inc.
Street Address:
City:
State:
Zip:
Submittal Date: Thu Sep 10 12:01:39 EDT 2020
Committee: NEC-P14

Committee Statement

Resolution: FR-8341-NFPA 70-2021

Statement: The current Informational Note No. 2 contains a reference to the entire Article 504. The informational note is reworded to remove split the last paragraph into two sentences, correct the reference to 500.5(A)(1) to correlate with actions taken in the first revision to 500.5 (A).

Public Input No. 3436-NFPA 70-2020 [New Section after 500.5(D)]

TITLE OF NEW CONTENT

(E) Combustible fibers/flyings.

Combustible fibers/flyings are solid materials where any dimension greater than 500 µm in nominall size, which can form an explosible mixture when suspended in air at standard atmospheric pressure and temperature.

Statement of Problem and Substantiation for Public Input

To align with revisions to NFPA 499, Combustible fibers/flyings is needed to address fibers and flying which remain is suspension for long periods of time and can form combustible mixtures when tested.

Submitter Information Verification

Submitter Full Name: Donald Ankele
Organization: UL LLC
Street Address:
City:
State:
Zip:
Submittal Date: Tue Sep 08 14:56:33 EDT 2020
Committee: NEC-P14

Committee Statement

Resolution: FR-8769-NFPA 70-2021

Statement: This new section reflects that an error in NFPA 499 where a Class III ignitible fiber/flying and Class IIIA combustible fibers/flyings were stated as being equal has been corrected by a tentative interim amendment (TIA) to NFPA 499-2021. Combustible material that is both greater than 500 µm in nominal size, which can form an explosive mixture was defined, and stated to be a Class III location. The recommended textl is revised to meet the submitter's intent and will be complimented with a revision to 500.5(D)(1) in a separate First Revision. The recommended text of this public input is more appropriately located as a new 500.6(C).

Public Input No. 3434-NFPA 70-2020 [Section No. 500.5(D)]

(D) Class III Locations.

Class III locations are those that are hazardous because of the presence of easily ignitible fibers or where materials producing ~~combustible~~ easily ignitible fibers/ flyings are handled, manufactured, or used, but in which such fibers/flyings are not likely to be in suspension in the air in quantities sufficient to produce ignitible mixtures. Class III locations shall include those specified in 500.5(D)(1) and (D)(2).

(1) Class III, Division 1.

A Class III, Division 1 location is a location in which easily ignitible fibers/flyings are handled, manufactured, or used.

Informational Note No. 1: Such locations usually include some parts of rayon, cotton, and other textile mills; combustible fibers/flyings manufacturing and processing plants; cotton gins and cotton-seed mills; flax-processing plants; clothing manufacturing plants; woodworking plants; and establishments and industries involving similar hazardous processes or conditions.

Informational Note No. 2: Easily ignitible fibers/flyings include rayon, cotton (including cotton linters and cotton waste), sisal or henequen, istle, jute, hemp, tow, cocoa fiber, oakum, baled waste kapok, Spanish moss, excelsior, and other materials of similar nature.

(2) Class III, Division 2.

A Class III, Division 2 location is a location in which easily ignitible fibers/flyings are stored or handled other than in the process of manufacture.

Statement of Problem and Substantiation for Public Input

Class III locations include ignitible fibers/flyings that settle out of the air, not combustible flyings, which can remain in suspension and when tested form combustible mixtures with air.

Submitter Information Verification

Submitter Full Name: Donald Ankele
Organization: UL LLC
Street Address:
City:
State:
Zip:
Submittal Date: Tue Sep 08 14:53:07 EDT 2020
Committee: NEC-P14

Committee Statement

Resolution: FR-8522-NFPA 70-2021

Statement: The revisions reflect that an error in NFPA 499 where Class III ignitable fiber/flying and Class IIIA combustible fibers/flyings were stated as being equal has been corrected through the issuance of a tentative interim amendment (TIA) to NFPA 499. Combustible material that is both greater that 500 μm in nominal size, which can form an explosive

mixture was defined, and is stated to be a Class III location.

Public Input No. 514-NFPA 70-2020 [Section No. 500.6(A)(2)]

(2) Group B.

Flammable gas, flammable liquid–produced vapor, or combustible liquid–produced vapor mixed with air that may burn or explode, having either a maximum experimental safe gap (MESG) value less than or equal to 0.45 mm or a minimum igniting current ratio (MIC ratio) less than or equal to 0.40. [**497:**3.3.5.1.2]

Informational Note: A typical Class I, Group B material is hydrogen.

~~*Exception No. 1: Group D equipment shall be permitted to be used for atmospheres containing butadiene, provided all conduit runs into explosionproof equipment are provided with explosionproof seals installed within 450 mm (18 in.) of the enclosure.*~~

~~*Exception No. 2: Group C equipment shall be permitted to be used for atmospheres containing allyl glycidyl ether, n-butyl glycidyl ether, ethylene oxide, propylene oxide, and acrolein, provided all conduit runs into explosionproof equipment are provided with explosionproof seals installed within 450 mm (18 in.) of the enclosure.*~~

Statement of Problem and Substantiation for Public Input

This section requires the chemical compounds to be grouped as to their characteristics. It doesn't require and particular equipment, so the exceptions except out a rule that does not exist in this section. It should be relocated to 500.8. I have submitted a PI to that section asking that this text be moved there.

Related Public Inputs for This Document

Related Input	Relationship
Public Input No. 515-NFPA 70-2020 [Section No. 500.8(B)(1)]	

Submitter Information Verification

Submitter Full Name: Ryan Jackson
Organization: Ryan Jackson
Street Address:
City:
State:
Zip:
Submittal Date: Fri Feb 21 12:14:17 EST 2020
Committee: NEC-P14

Committee Statement

Resolution: FR-8329-NFPA 70-2021

Statement: These exceptions previously were located in Section 500.6(A)(2) and they should be relocated to 500.8(B)(1), since they are exceptions to what equipment is allowed to be installed in the hazardous location, not an exception to the definition of the Group classification stated in 500.6.

Public Input No. 2241-NFPA 70-2020 [Section No. 500.7]

500.7 Protection Techniques.

Electrical and electronic equipment in hazardous (classified) locations shall be protected by one or more of the techniques in 500.7(A) through (P).

(A) Explosionproof Equipment.

This protection technique shall be permitted for equipment in Class I, Division 1 or 2 locations.

(B) Dust Ignitionproof.

This protection technique shall be permitted for equipment in Class II, Division 1 or 2 locations.

(C) Dusttight.

This protection technique shall be permitted for equipment in Class II, Division 2 or Class III, Division 1 or 2 locations.

(D) Purged and Pressurized.

This protection technique shall be permitted for equipment in any hazardous (classified) location for which it is identified.

(E) Intrinsic Safety.

This protection technique shall be permitted for equipment in Class I, Division 1 or 2; or Class II, Division 1 or 2; or Class III, Division 1 or 2 locations. The provisions of Articles 501 through 503 and Articles 510 through 516 shall not be considered applicable to such installations, except as required by Article 504, and installation of intrinsically safe apparatus and wiring shall be in accordance with the requirements of Article 504.

(F) Nonincendive Circuit.

This protection technique shall be permitted for equipment in Class I, Division 2; Class II, Division 2; or Class III, Division 1 or 2 locations.

(G) Nonincendive Equipment.

This protection technique shall be permitted for equipment in Class I, Division 2; Class II, Division 2; or Class III, Division 1 or 2 locations.

(H) Nonincendive Component.

This protection technique shall be permitted for equipment in Class I, Division 2; Class II, Division 2; or Class III, Division 1 or 2 locations.

(I) Oil Immersion.

This protection technique shall be permitted for current-interrupting contacts in Class I, Division 2 locations as described in 501.115(B)(1)(2).

(J) Hermetically Sealed.

This protection technique shall be permitted for equipment in Class I, Division 2; Class II, Division 2; or Class III, Division 1 or 2 locations.

(K) Combustible Gas Detection System.

A combustible gas detection system shall be permitted as a means of protection in industrial establishments with restricted public access and where the conditions of maintenance and supervision ensure that only qualified persons service the installation.

(1) General.

Any gas detection system utilized as a protection technique shall meet all of the requirements in 500.7(K)(1)(a) through (K)(1)(e).

(a) The gas detection equipment used shall be listed for Class I, Division 1 and listed for the detection of the specific gas or vapor to be encountered.

(b) The gas detection system shall not utilize portable or transportable equipment or temporary wiring methods.

(c) The gas detection system shall only use point-type sensors. The system shall be permitted to be augmented with open-path (line-of-sight)–type sensors, but open-path–type sensors shall not be the basis for this protection technique.

(d) The type of detection equipment, its listing, installation location(s), alarm and shutdown criteria, and calibration frequency shall be documented where combustible gas detectors are used as a protection technique.

(e) The applications for the use of combustible gas detection systems as a protection technique shall be limited to 500.7(K)(2), (K)(3), or (K)(4).

Informational Note No. 1: For further information, see ISA-TR12.13.03-2009, *Guide for Combustible Gas Detection as a Method of Protection*.

Informational Note No. 2: For further information, see ANSI/ISA-60079-29-1 (12.13.01)-2013, *Explosive Atmospheres — Part 29-1: Gas detectors — Performance requirements of detectors for flammable gases*.

Informational Note No. 3: For further information, see ANSI/API RP 500-2012, *Recommended Practice for Classification of Locations for Electrical Installations at Petroleum Facilities Classified as Class I, Division 1 and Division 2.*

Informational Note No. 4: For further information, see ANSI/ISA-60079-29-2 (12.13.02)-2012, *Explosive Atmospheres — Part 29-2: Gas detectors — Selection, installation, use and maintenance of detectors for flammable gases and oxygen*.

(2) Inadequate Ventilation.

A location, enclosed space, or building that is classified as a Class I, Division 1 location due to inadequate ventilation, that is provided with a combustible gas detection system shall be permitted to utilize electrical equipment, installation methods, and wiring practices suitable for Class I, Division 2 installations. Sensing a gas concentration of not more than 40 percent of the lower flammable limit or a gas detector system malfunction shall activate an alarm (audible or visual, or both, as most appropriate for the area).

(3) Interior of a Building or Enclosed Space.

Any building or enclosed space that does not contain a source of flammable gas or vapors that is located in, or with an opening into, a Class I, Division 2 hazardous (classified) location that is provided with a combustible gas detection system shall be permitted to utilize electrical equipment, installation methods, and wiring practices suitable for unclassified installations under all of the following conditions:

(1) An alarm (audible or visual, or both) shall be sounded at not more than 20 percent of the lower flammable limit.

(2) Sensing a gas concentration of not more than 40 percent of the lower flammable limit or a gas detector system malfunction shall both activate an alarm (audible or visual, or both, as most appropriate for the area) and initiate automatic disconnection of power from all electrical devices in the area that are not suitable for Class I, Division 2.

(3) The power disconnecting device(s) shall be suitable for Class I, Division 1 if located inside the building or enclosed space. If the disconnecting device(s) is located outside the building or enclosed space, it shall be suitable for the location in which it is installed.

Redundant or duplicate equipment (such as sensors) shall be permitted to be installed to avoid disconnecting electrical power when equipment malfunctions are indicated.

When automatic shutdown could introduce additional or increased hazard, this technique shall not be permitted.

(4) Interior of a Control Panel.

Inside the interior of a control panel containing instrumentation or other equipment utilizing or measuring flammable liquids, gases, or vapors, which is provided with combustible gas detection equipment shall be permitted to utilize electrical equipment, installation methods, and wiring practices suitable for Class I, Division 2 installations.

An alarm (audible or visual, or both) shall be sounded at not more than 40 percent of the lower flammable limit.

(L) Inherently Safe Optical Radiation “op is.”

This protection technique shall be permitted for equipment in Class I or II, Division 1 or 2 locations for which the equipment is identified.

> Informational Note: The identified class and division depends on the intended explosive atmosphere and the number of faults applied as part of the protection technique evaluation.

(M) Protected Optical Radiation “op pr.”

This protection technique shall be permitted for equipment in Class I or II, Division 2 locations for which the equipment is identified.

> Informational Note: The identified class and division depends on the intended explosive atmosphere as part of the protection technique evaluation.

(N) Optical System With Interlock “op sh.”

This protection technique shall be permitted for equipment in Class I or II, Division 1 or 2 locations for which the equipment is identified.

> Informational Note: The identified class and division depends on the intended explosive atmosphere and the number of faults applied as part of the protection technique evaluation.

(O) Protection by Skin Effect Trace Heating “IEEE 844.1”.

This protection technique shall be permitted for skin effect trace heating equipment in Class I, Division 2; Class II, Division 2; or Class III, Division 2 for which it is listed.

(P) ~~Other Protection Techniques.~~ ~~**Protection by Electrical Resistance Trace Heating "60079-30-1"**~~

This protection technique shall be permitted for resistance trace heating equipment in Class 1, Division 1 and Class 11 Division 1 and 2 or Class III, Division 2 for which it is listed

(Q) Protection by Impedance Heating IEEE 844.3

This protection technique shall be permitted for impedance heating equipment in Class 1, Division 2, Class 11 Division 2 or Class III, Division 2 for which it is listed

(N) Other protection techniques used in equipment identified for use in hazardous (classified) locations

Statement of Problem and Substantiation for Public Input

This proposal updates information from industry standards. It makes available the most up-to-date product and marking requirements and provides criteria to determine the suitability when utilized in industrial and commercial applications. The information should help provide electrical, mechanical durability such that in normal use its performance is reliable and poses no danger to the user or surroundings

Submitter Information Verification

Submitter Full Name: Ben Johnson
Organization: [Not Specified]
Affiliation: Thermon
Street Address:
City:
State:
Zip:
Submittal Date: Wed Aug 12 11:45:10 EDT 2020
Committee: NEC-P14

Committee Statement

Resolution: FR-8624-NFPA 70-2021

Statement: "Enclosed-break" is a Class I, Division 2 type of protection in accordance with ANSI/UL 121201. It is not a new Class I, Division 2 type of protection, but has not been identified in the NEC as such. This simply addresses that oversight. FR2-2 "Nonsparking" is a Class I, Division 2 type of protection in accordance with ANSI/UL 121201. It is not a new Class I, Division 2 type of protection, but has not been identified in the NEC as such. This simply addresses that oversight.

Public Input No. 444-NFPA 70-2020 [Section No. 500.7]

500.7 Protection Techniques.

Electrical and electronic equipment in hazardous (classified) locations shall be protected by one or more of the techniques as shown in Table 500.7 ~~(A) through (P).~~

~~**(A)** Explosionproof Equipment.~~

~~This protection technique shall be permitted for equipment in Class I, Division 1 or 2 locations.~~

~~**(B)** Dust Ignitionproof.~~

~~This protection technique shall be permitted for equipment in Class II, Division 1 or 2 locations.~~

~~**(C)** Dusttight.~~

~~This protection technique shall be permitted for equipment in Class II, Division 2 or Class III, Division 1 or 2 locations.~~

~~**(D)** Purged and Pressurized.~~

~~This protection technique shall be permitted for equipment in any hazardous (classified) location for which it is identified.~~

~~**(E)** Intrinsic Safety.~~

~~This protection technique shall be permitted for equipment in Class I, Division 1 or 2; or Class II, Division 1 or 2; or Class III, Division 1 or 2 locations. The provisions of Articles 501 through 503 and Articles 510 through 516 shall not be considered applicable to such installations, except as required by Article 504, and installation of intrinsically safe apparatus and wiring shall be in accordance with the requirements of Article 504.~~

~~**(F)** Nonincendive Circuit.~~

~~This protection technique shall be permitted for equipment in Class I, Division 2; Class II, Division 2; or Class III, Division 1 or 2 locations.~~

~~**(G)** Nonincendive Equipment.~~

~~This protection technique shall be permitted for equipment in Class I, Division 2; Class II, Division 2; or Class III, Division 1 or 2 locations.~~

~~**(H)** Nonincendive Component.~~

~~This protection technique shall be permitted for equipment in Class I, Division 2; Class II, Division 2; or Class III, Division 1 or 2 locations.~~

~~**(I)** Oil Immersion.~~

~~This protection technique shall be permitted for current-interrupting contacts in Class I, Division 2 locations as described in 501.115(B)(1)(2) .~~

~~**(J)** Hermetically Sealed.~~

~~This protection technique shall be permitted for equipment in Class I, Division 2; Class II, Division 2; or Class III, Division 1 or 2 locations.~~

~~(K~~

in addition to the techniques in 500.7(A) through (B).

Insert Table here for usability

(A)_ Combustible Gas Detection System.

A combustible gas detection system shall be permitted as a means of protection in industrial establishments with restricted public access and where the conditions of maintenance and supervision ensure that only qualified persons service the installation.

(1) General.

Any gas detection system utilized as a protection technique shall meet all of the requirements in 500.7(K)(1)(a) through (K)(1)(e).

(a) The gas detection equipment used shall be listed for Class I, Division 1 and listed for the detection of the specific gas or vapor to be encountered.

(b) The gas detection system shall not utilize portable or transportable equipment or temporary wiring methods.

(c) The gas detection system shall only use point-type sensors. The system shall be permitted to be augmented with open-path (line-of-sight)–type sensors, but open-path–type sensors shall not be the basis for this protection technique.

(d) The type of detection equipment, its listing, installation location(s), alarm and shutdown criteria, and calibration frequency shall be documented where combustible gas detectors are used as a protection technique.

(e) The applications for the use of combustible gas detection systems as a protection technique shall be limited to 500.7(K)(2), (K)(3), or (K)(4).

Informational Note No. 1: For further information, see ISA-TR12.13.03-2009, *Guide for Combustible Gas Detection as a Method of Protection*.

Informational Note No. 2: For further information, see ANSI/ISA-60079-29-1 (12.13.01)-2013, *Explosive Atmospheres — Part 29-1: Gas detectors — Performance requirements of detectors for flammable gases*.

Informational Note No. 3: For further information, see ANSI/API RP 500-2012, *Recommended Practice for Classification of Locations for Electrical Installations at Petroleum Facilities Classified as Class I, Division 1 and Division 2.*

Informational Note No. 4: For further information, see ANSI/ISA-60079-29-2 (12.13.02)-2012, *Explosive Atmospheres — Part 29-2: Gas detectors — Selection, installation, use and maintenance of detectors for flammable gases and oxygen*.

(2) Inadequate Ventilation.

A location, enclosed space, or building that is classified as a Class I, Division 1 location due to inadequate ventilation, that is provided with a combustible gas detection system shall be permitted to utilize electrical equipment, installation methods, and wiring practices suitable for Class I, Division 2 installations. Sensing a gas concentration of not more than 40 percent of the lower flammable limit or a gas detector system malfunction shall activate an alarm (audible or visual, or both, as most appropriate for the area).

(3) Interior of a Building or Enclosed Space.

Any building or enclosed space that does not contain a source of flammable gas or vapors that is located in, or with an opening into, a Class I, Division 2 hazardous (classified) location that is provided with a combustible gas detection system shall be permitted to utilize electrical equipment, installation methods, and wiring practices suitable for unclassified installations under all of the following conditions:

(1) An alarm (audible or visual, or both) shall be sounded at not more than 20 percent of the lower flammable limit.

(2) Sensing a gas concentration of not more than 40 percent of the lower flammable limit or a gas detector system malfunction shall both activate an alarm (audible or visual, or both, as most appropriate for the area) and initiate automatic disconnection of power from all electrical devices in the area that are not suitable for Class I, Division 2.

(3) The power disconnecting device(s) shall be suitable for Class I, Division 1 if located inside the building or enclosed space. If the disconnecting device(s) is located outside the building or enclosed space, it shall be suitable for the location in which it is installed.

Redundant or duplicate equipment (such as sensors) shall be permitted to be installed to avoid disconnecting electrical power when equipment malfunctions are indicated.

When automatic shutdown could introduce additional or increased hazard, this technique shall not be permitted.

(4) Interior of a Control Panel.

Inside the interior of a control panel containing instrumentation or other equipment utilizing or measuring flammable liquids, gases, or vapors, which is provided with combustible gas detection equipment shall be permitted to utilize electrical equipment, installation methods, and wiring practices suitable for Class I, Division 2 installations.

An alarm (audible or visual, or both) shall be sounded at not more than 40 percent of the lower flammable limit.

(~~L) Inherently Safe Optical Radiation "op is."~~

~~This protection technique shall be permitted for equipment in Class I or II, Division 1 or 2 locations for which the equipment is identified.~~

~~Informational Note: The identified class and division depends on the intended explosive atmosphere and the number of faults applied as part of the protection technique evaluation.~~

~~**(M)** Protected Optical Radiation "op pr."~~

~~This protection technique shall be permitted for equipment in Class I or II, Division 2 locations for which the equipment is identified.~~

~~Informational Note: The identified class and division depends on the intended explosive atmosphere as part of the protection technique evaluation.~~

~~**(N)** Optical System With Interlock "op sh."~~

~~This protection technique shall be permitted for equipment in Class I or II, Division 1 or 2 locations for which the equipment is identified.~~

~~Informational Note: The identified class and division depends on the intended explosive atmosphere and the number of faults applied as part of the protection technique evaluation.~~

~~**(O)** Protection by Skin Effect Trace Heating "IEEE 844.1".~~

~~This protection technique shall be permitted for skin effect trace heating equipment in Class I, Division 2; Class II, Division 2; or Class III, Division 2 for which it is listed.~~

~~**(P)**~~

B) Other Protection Techniques.

Other protection techniques used in equipment identified for use in hazardous (classified) locations.

Additional Proposed Changes

File Name	Description	Approved
Table_500.7.docx		

Statement of Problem and Substantiation for Public Input

The present text is somewhat cumbersome with each first level subdivision only including the protection technique and which hazardous location it is permitted to be installed. Inserting a Table into this section of the code will make it much more user friendly.

Submitter Information Verification

Submitter Full Name: David Hittinger
Organization: IEC
Affiliation: IEC
Street Address:
City:
State:
Zip:
Submittal Date: Sat Feb 08 08:51:05 EST 2020
Committee: NEC-P14

Committee Statement

Resolution: FR-8653-NFPA 70-2021
Statement: This action provides a reference to new Table 13 in Chapter 9 created by the action on Public Input 2287. The language of 500.7 has been revised to recognize the addition of new protection techniques.

	Class 1		Class II		Class III	
Protection Technique	**Division 1**	**Division 2**	**Division 1**	**Division 2**	**Division 1**	**Division 2**
Explosionproof Equipment	x		x			
Dust Ignitionproof		x		x		
Dusttight				x	x	x
Purged and Pressurized	x	x	x	x	x	x
Intrinsic Safety	x	x	x	x	x	x
Noninendive Circuit		x		x	x	x
Nonincendive Equipment		x		x	x	x
Nonincendive Component		x		x	x	x
Oil Immersion		x				
Hermetically Sealed		x		x	x	x
Combustible Gas Detection System						
Inherently Safe Optical Radiation "op is"	x	x	x	x		
Protected Optical Radiation "op pr"		x		x		
Protected Optical Radiation "op sh"	x	x	x	x		
Protection by Skin Effect Heat Trace Heating "IEEE 844.1		x		x	x	x

Public Input No. 2138-NFPA 70-2020 [New Section after 500.7(C)]

Enclosed-break.
This protection technique shall be permitted for equipment in Class I, Division 2 locations.

Statement of Problem and Substantiation for Public Input

"Enclosed-break" is a Class I, Division 2 type of protection in accordance with ANSI/UL 121201. It is not a new Class I, Division 2 type of protection, but has not been identified in the NEC as such. This proposal simply addresses that oversight.

See also Public Input No. 2137-NFPA 70-2020.

Related Public Inputs for This Document

Related Input	Relationship
Public Input No. 2137-NFPA 70-2020 [New Definition after Definition: Encapsulation “m”.]	
Public Input No. 2137-NFPA 70-2020 [New Definition after Definition: Encapsulation “m”.]	

Submitter Information Verification

Submitter Full Name: Paul Kelly
Organization: UL LLC
Street Address:
City:
State:
Zip:
Submittal Date: Mon Aug 03 10:12:12 EDT 2020
Committee: NEC-P14

Committee Statement

Resolution: FR-8624-NFPA 70-2021

Statement: "Enclosed-break" is a Class I, Division 2 type of protection in accordance with ANSI/UL 121201. It is not a new Class I, Division 2 type of protection, but has not been identified in the NEC as such. This simply addresses that oversight. FR2-2 "Nonsparking" is a Class I, Division 2 type of protection in accordance with ANSI/UL 121201. It is not a new Class I, Division 2 type of protection, but has not been identified in the NEC as such. This simply addresses that oversight.

Public Input No. 4072-NFPA 70-2020 [Section No. 500.7(E)]

(E) Intrinsic Safety.

This protection technique shall be permitted for equipment in Class I, Division 1 or 2; or Class II, Division 1 or 2; or Class III, Division 1 or 2 locations. ~~The provisions of~~ Articles 501 through 503 and Articles 510 through 516 shall not be considered applicable to such installations, except as required by Article 504, and installation of intrinsically safe apparatus and wiring shall be in accordance ~~with the requirements of~~ with Article 504.

Statement of Problem and Substantiation for Public Input

Deleting the first three words of the second sentence and Deleting the words "the requirements of" does not change the meaning of the section.
The panel should consider revising the references to entire articles as referenced in the Style Manual 4.1.4 where a section shall not reference a complete article.

Submitter Information Verification

Submitter Full Name: David Williams
Organization: Delta Charter Township
Street Address:
City:
State:
Zip:
Submittal Date: Wed Sep 09 19:58:19 EDT 2020
Committee: NEC-P14

Committee Statement

Resolution: FR-8317-NFPA 70-2021
Statement: The text has been deleted for correlation with the action on Public Inputs 1709 and 1767 and for compliance with 4.1.4 of the NEC Style Manual.

Public Input No. 4403-NFPA 70-2020 [Section No. 500.7(E)]

(E) Intrinsic Safety.

This protection technique shall be permitted for equipment in Class I, Division 1 or 2; or Class II, Division 1 or 2; or Class III, Division 1 or 2 locations. The provisions of ~~Articles~~ ~~501~~ ~~through~~ ~~503~~ ~~and Articles~~ ~~510~~ ~~through~~ ~~516~~ ~~shall not be considered applicable to such installations, except as required by Article~~ ~~504~~ ~~, and installation of intrinsically safe apparatus~~ the hazardous location articles apply except as modified by the intrinsically safe systems article. Installation of intrinsically safe appartus and wiring shall be in accordance with the requirements of ~~Article~~ ~~504~~ the intrinsically safe systems article .

Statement of Problem and Substantiation for Public Input

Section 4.1.4 of the 2020 NEC(r) Style Manual prohibits references to an entire article, with the exception of Article 100. References to the entire articles were replaced with the more generic language and the wording was changed so the hazardous location requirements apply except as modified by the intrinsically safe systems article. This seems to make more sense since the intrinsically safe systems article specifically identifies wiring methods and installation requirements specific to the protection method.

Submitter Information Verification

Submitter Full Name: Richard Holub
Organization: The DuPont Company, Inc.
Street Address:
City:
State:
Zip:
Submittal Date: Thu Sep 10 12:10:01 EDT 2020
Committee: NEC-P14

Committee Statement

Resolution: FR-8317-NFPA 70-2021
Statement: The text has been deleted for correlation with the action on Public Inputs 1709 and 1767 and for compliance with 4.1.4 of the NEC Style Manual.

Public Input No. 2108-NFPA 70-2020 [New Section after 500.7(H)]

(I) Nonsparking.
This protection technique shall be permitted for equipment in Class I, Division 2 locations.

Statement of Problem and Substantiation for Public Input

"Nonsparking" is a Class I, Division 2 type of protection in accordance with ANSI/UL 121201. It is not a new Class I, Division 2 type of protection, but has not been identified in the NEC as such. This proposal simply addresses that oversight.

See also Public Input No. 2107-NFPA 70-2020.

Related Public Inputs for This Document

Related Input	Relationship
Public Input No. 2107-NFPA 70-2020 [New Definition after Definition: Nonincendive Field Wiring ...]	
Public Input No. 2107-NFPA 70-2020 [New Definition after Definition: Nonincendive Field Wiring ...]	

Submitter Information Verification

Submitter Full Name: Paul Kelly
Organization: UL LLC
Street Address:
City:
State:
Zip:
Submittal Date: Thu Jul 30 19:57:41 EDT 2020
Committee: NEC-P14

Committee Statement

Resolution: FR-8624-NFPA 70-2021

Statement: "Enclosed-break" is a Class I, Division 2 type of protection in accordance with ANSI/UL 121201. It is not a new Class I, Division 2 type of protection, but has not been identified in the NEC as such. This simply addresses that oversight. FR2-2 "Nonsparking" is a Class I, Division 2 type of protection in accordance with ANSI/UL 121201. It is not a new Class I, Division 2 type of protection, but has not been identified in the NEC as such. This simply addresses that oversight.

Public Input No. 2106-NFPA 70-2020 [New Section after 500.7(J)]

(K) Sealed.
This protection technique shall be permitted for equipment in Class I, Division 2; Class II, Division 2; or Class III, Division 1 or 2 locations.

Statement of Problem and Substantiation for Public Input

"Sealed device" is a Class I and II, Division 2 and Class III type of protection in accordance with ANSI/UL 121201. It is not a new Class I and II, Division 2 or Class III type of protection, but has not been identified in the NEC as such. This proposal simply addresses that oversight.

See also Public Input No. 2104-NFPA 70-2020.

Related Public Inputs for This Document

Related Input	Relationship
Public Input No. 2104-NFPA 70-2020 [New Definition after Definition: Purged and Pressurized.]	
Public Input No. 2104-NFPA 70-2020 [New Definition after Definition: Purged and Pressurized.]	

Submitter Information Verification

Submitter Full Name: Paul Kelly
Organization: UL LLC
Street Address:
City:
State:
Zip:
Submittal Date: Thu Jul 30 19:24:38 EDT 2020
Committee: NEC-P14

Committee Statement

Resolution: FR-8624-NFPA 70-2021

Statement: "Enclosed-break" is a Class I, Division 2 type of protection in accordance with ANSI/UL 121201. It is not a new Class I, Division 2 type of protection, but has not been identified in the NEC as such. This simply addresses that oversight. FR2-2 "Nonsparking" is a Class I, Division 2 type of protection in accordance with ANSI/UL 121201. It is not a new Class I, Division 2 type of protection, but has not been identified in the NEC as such. This simply addresses that oversight.

Public Input No. 707-NFPA 70-2020 [Section No. 500.7(K)(1)]

(1)_ General.

Any gas detection system utilized as a protection technique shall meet all of the requirements in 500.7(K)(1)(a) through (K)(1)(e).

(a) The gas detection equipment used shall be listed for Class I, Division 1 and listed for the detection of the specific gas or vapor to be encountered.

(b) The gas detection system shall not utilize portable or transportable equipment or temporary wiring methods.

(c) The gas detection system shall only use point-type sensors. The system shall be permitted to be augmented with open-path (line-of-sight)–type sensors, but open-path–type sensors shall not be the basis for this protection technique.

(d) The type of detection equipment, its listing, installation location(s), alarm and shutdown criteria, and calibration frequency shall be documented where combustible gas detectors are used as a protection technique.

(e) The applications for the use of combustible gas detection systems as a protection technique shall be limited to 500.7(K)(2), (K)(3), or (K)(4).

Informational Note No. 1: For further information, see ISA-TR12.13.03-2009, *Guide for Combustible Gas Detection as a Method of Protection*.

Informational Note No. 2: For further information, see ANSI/~~ISA-~~ UL 60079-29-1 ~~(12.13.01)-2013~~ -2019 , *Explosive ~~Atmospheres~~ atmospheres — Part 29-1: Gas detectors — Performance requirements of detectors for flammable gases*.

Informational Note No. 3: For further information, see ANSI/API RP 500-2012, *Recommended Practice for Classification of Locations for Electrical Installations at Petroleum Facilities Classified as Class I, Division 1 and Division 2.*

Informational Note No. 4: For further information, see ANSI/~~ISA-~~ UL 60079-29-2 ~~(12.13.02)-2012~~ -2018 , *Explosive ~~Atmospheres~~ atmospheres — Part 29-2: Gas detectors — Selection, installation, use and maintenance of detectors for flammable gases and oxygen*.

Statement of Problem and Substantiation for Public Input

ANSI/ISA-60079-29-1 (12.13.01)-2013 and ANSI/ISA-60079-29-2 (12.13.02)-2012 have been replace by ANSI/UL 60079-29-1-2019 and ANSI/UL 60079-29-2-2018.

See also PI No. 716.

Related Public Inputs for This Document

Related Input	Relationship
Public Input No. 716-NFPA 70-2020 [Section No. 505.8(I)(1)]	
Public Input No. 716-NFPA 70-2020 [Section No. 505.8(I)(1)]	

Submitter Information Verification

Submitter Full Name: Paul Kelly

Organization: UL LLC
Street Address:
City:
State:
Zip:
Submittal Date: Thu Mar 19 20:57:07 EDT 2020
Committee: NEC-P14

Committee Statement

Resolution: FR-8631-NFPA 70-2021

Statement: Add the titles of the co-published FM standards for Informational Notes 2 and 4. Additionally the Informational Note No. 1 to ANSI/UL/FM 121303-2020 Guide for the use of combustible gas detection equipment has been revised. In addition, the Informational Notes are reworded to meet the requirements of NEC Style Manual 3.1.3.1. This is simply an editorial change and not intended to change the intent of the informational note.

Public Input No. 721-NFPA 70-2020 [New Section after 500.7(N)]

(O) Protection by Electrical Resistance Trace Heating "60079-30-1"

This protection technique shall be permitted for electrical resistance trace heating equipment in Class I, Division 1, Class I, Division 2, Class II, Division 1, Class II, Division 2, Class III, Division 1 or Class III, Division 2 for which it is listed.

Also need to renumber existing 500.7(O) and 500.7(P).

Statement of Problem and Substantiation for Public Input

Reference is made to IEEE 844.1 as a Division protection technique, but no mention is made to ANSI/UL 60079-30-1, which is also a Division protection technique.

Submitter Information Verification

Submitter Full Name: Paul Kelly
Organization: UL LLC
Street Address:
City:
State:
Zip:
Submittal Date: Fri Mar 20 14:36:57 EDT 2020
Committee: NEC-P14

Committee Statement

Resolution: FR-8624-NFPA 70-2021

Statement: "Enclosed-break" is a Class I, Division 2 type of protection in accordance with ANSI/UL 121201. It is not a new Class I, Division 2 type of protection, but has not been identified in the NEC as such. This simply addresses that oversight. FR2-2 "Nonsparking" is a Class I, Division 2 type of protection in accordance with ANSI/UL 121201. It is not a new Class I, Division 2 type of protection, but has not been identified in the NEC as such. This simply addresses that oversight.

Public Input No. 2282-NFPA 70-2020 [Section No. 500.7 [Excluding any Sub-Sections]]

Electrical and electronic equipment in hazardous (classified) locations shall be protected by one or more of the techniques in 500.7(A) through (P). Suitability of the protection techniques for specific hazardous locations is shown in Table 13 (proposed).

Statement of Problem and Substantiation for Public Input

Identify the applicability of the various protection techniques in a single location, the new proposed Table 13.

Submitter Information Verification

Submitter Full Name: William Lawrence
Organization:
Street Address:
City:
State:
Zip:
Submittal Date: Thu Aug 13 15:31:04 EDT 2020
Committee: NEC-P14

Committee Statement

Resolution: FR-8653-NFPA 70-2021

Statement: This action provides a reference to new Table 13 in Chapter 9 created by the action on Public Input 2287. The language of 500.7 has been revised to recognize the addition of new protection techniques.

Public Input No. 2318-NFPA 70-2020 [Section No. 500.8(B)]

(B) Approval for Class and Properties.

(1) Identification Criterion

Equipment shall be identified not only for the class of location but also for the explosive, combustible, or ignitible properties of the specific gas, vapor, dust, or fibers/flyings that will be present. In addition, Class I equipment shall not have any exposed surface that operates at a temperature in excess of the autoignition temperature of the specific gas or vapor. Class II equipment shall not have an external temperature higher than that specified in 500.8(D)(2). Class III equipment shall not exceed the maximum surface temperatures specified in 503.5.

> Informational Note: Luminaires and other heat-producing apparatus, switches, circuit breakers, and plugs and receptacles are potential sources of ignition and are investigated for suitability in classified locations. Such types of equipment, as well as cable terminations for entry into explosionproof enclosures, are available as listed for Class I, Division 2 locations. Fixed wiring, however, may utilize wiring methods that are not evaluated with respect to classified locations. Wiring products such as cable, raceways, boxes, and fittings, therefore, are not marked as being suitable for Class I, Division 2 locations. Also see 500.8(C)(6)(a).

(2) Application Permissions

Equipment that has been identified for a Division 1 location shall be permitted in a Division 2 location of the same class, group, and temperature class and shall comply with 500.8(B)(2)(a) or (B)(2)(b) as applicable.

(a) Intrinsically safe apparatus having a control drawing requiring the installation of associated apparatus for a Division 1 installation shall be permitted to be installed in a Division 2 location if the same associated apparatus is used for the Division 2 installation.

(b) Equipment that is required to be explosionproof shall incorporate seals in accordance with 501.15(A) or (D) when the wiring methods of 501.10(B) are employed.

(3) Qualified Exemptions

Where specifically permitted in Articles 501 through 503, general-purpose equipment or equipment in general-purpose enclosures shall be permitted to be installed in Division 2 locations if the equipment does not constitute a source of ignition under normal operating conditions.

(4) Combustion Seals

Equipment that depends on a single compression seal, diaphragm, or tube to prevent flammable or combustible fluids from entering the equipment shall be identified for a Class I, Division 2 location even if installed in an unclassified location. Equipment installed in a Class I, Division 1 location shall be identified for the Class I, Division 1 location.

> Informational Note: Equipment used for flow measurement is an example of equipment having a single compression seal, diaphragm, or tube.

(5) Motor Load Conditions

Unless otherwise specified, normal operating conditions for motors shall be assumed to be rated full-load steady conditions.

(6) Temperature Design Constraints

Where flammable gases, flammable liquid–produced vapors, combustible liquid–produced vapors, or combustible dusts are or may be present at the same time, the simultaneous presence of both shall be considered when determining the safe operating temperature of the electrical equipment.

Informational Note: The characteristics of various atmospheric mixtures of gases, vapors, and dusts depend on the specific material involved.

Statement of Problem and Substantiation for Public Input

The word description for these numerical paragraph headings are absent, and is not consistent to the typical NEC text format. The addition of a topical heading may help clarify distinctions in application for code text searches.

Submitter Information Verification

Submitter Full Name: John Blissett
Organization: Bernhard TME
Street Address:
City:
State:
Zip:
Submittal Date: Fri Aug 14 12:48:41 EDT 2020
Committee: NEC-P14

Committee Statement

Resolution: FR-8731-NFPA 70-2021

Statement: These exceptions previously were located in Section 500.6 and they should be relocated to 500.8, since they are exceptions to what equipment is allowed to be installed in the hazardous location, not an exception to the definition of the Group classification stated in 500.6. In addition, second level subdivisions are required to have titles, in accordance with NEC® Style Manual 2.1.5.2 and have been added accordingly. Finally, Section 4.1.4 of the 2020 NEC(r) Style Manual prohibits references to an entire article, with the exception of Article 100. As the equipment requirements are found in Part III of the division based articles, substituting "Part III of Articles 501, 502, or 503" accomplishes the requirement without changing the intent of the code section. In 500.8(B)(6) the informational note is deleted and the word “both” is changed to “the specific materials” to better clarify the code language and delete the unnecessary informational note. Additionally the language was changed to make it clear that if you have vapors or gases simultaneously with combustible dust, that’s when the specific evaluation of the combined presence is required. Titles have been added to items 1 through 6 for compliance with the NEC Style Manual.

Public Input No. 515-NFPA 70-2020 [Section No. 500.8(B)(1)]

(1)

Equipment shall be identified not only for the class of location but also for the explosive, combustible, or ignitible properties of the specific gas, vapor, dust, or fibers/flyings that will be present. In addition, Class I equipment shall not have any exposed surface that operates at a temperature in excess of the autoignition temperature of the specific gas or vapor. Class II equipment shall not have an external temperature higher than that specified in 500.8(D)(2). Class III equipment shall not exceed the maximum surface temperatures specified in 503.5.

Informational Note: Luminaires and other heat-producing apparatus, switches, circuit breakers, and plugs and receptacles are potential sources of ignition and are investigated for suitability in classified locations. Such types of equipment, as well as cable terminations for entry into explosionproof enclosures, are available as listed for Class I, Division 2 locations. Fixed wiring, however, may utilize wiring methods that are not evaluated with respect to classified locations. Wiring products such as cable, raceways, boxes, and fittings, therefore, are not marked as being suitable for Class I, Division 2 locations. Also see 500.8(C)(6)(a).

Exception No. 1: Group D equipment shall be permitted to be used for atmospheres containing butadiene, provided all conduit runs into explosionproof equipment are provided with explosionproof seals installed within 450 mm (18 in.) of the enclosure.

Exception No. 2: Group C equipment shall be permitted to be used for atmospheres containing allyl glycidyl ether, n-butyl glycidyl ether, ethylene oxide, propylene oxide, and acrolein, provided all conduit runs into explosionproof equipment are provided with explosionproof seals installed within 450 mm (18 in.) of the enclosure.

Statement of Problem and Substantiation for Public Input

This is text that I recommend relocating from 500.6(A)(2).

Related Public Inputs for This Document

Related Input	Relationship
Public Input No. 514-NFPA 70-2020 [Section No. 500.6(A)(2)]	Relocation of text

Submitter Information Verification

Submitter Full Name: Ryan Jackson
Organization: Ryan Jackson
Street Address:
City:
State:
Zip:
Submittal Date: Fri Feb 21 12:17:50 EST 2020
Committee: NEC-P14

Committee Statement

Resolution: FR-8731-NFPA 70-2021

Statement: These exceptions previously were located in Section 500.6 and they should be relocated to 500.8, since they are exceptions to what equipment is allowed to be installed in the hazardous location, not an exception to the definition of the Group classification stated in 500.6. In addition, second level subdivisions are required to have titles, in accordance with NEC® Style Manual 2.1.5.2 and have been added accordingly. Finally, Section 4.1.4 of the 2020 NEC(r) Style Manual prohibits references to an entire article, with the exception of Article 100. As the equipment requirements are found in Part III of the division based articles, substituting "Part III of Articles 501, 502, or 503" accomplishes the requirement without changing the intent of the code section. In 500.8(B)(6) the informational note is deleted and the word “both” is changed to “the specific materials” to better clarify the code language and delete the unnecessary informational note. Additionally the language was changed to make it clear that if you have vapors or gases simultaneously with combustible dust, that’s when the specific evaluation of the combined presence is required. Titles have been added to items 1 through 6 for compliance with the NEC Style Manual.

Public Input No. 4413-NFPA 70-2020 [Section No. 500.8(B)(3)]

(3)

Where specifically permitted in ~~Articles 501 through~~ Part III of Article 501, Article 502, or Article 503 , general-purpose equipment or equipment in general-purpose enclosures shall be permitted to be installed in Division 2 locations if the equipment does not constitute a source of ignition under normal operating conditions.

Statement of Problem and Substantiation for Public Input

Section 4.1.4 of the 2020 NEC(r) Style Manual prohibits references to an entire article, with the exception of Article 100. As the equipment requirements are found in Part III of the division based articles, substituting "Part III of Article 501, Article 502, or Article 503" accomplishes the requirement without changing the intent of the code section.

Submitter Information Verification

Submitter Full Name: Richard Holub
Organization: The DuPont Company, Inc.
Street Address:
City:
State:
Zip:
Submittal Date: Thu Sep 10 12:25:52 EDT 2020
Committee: NEC-P14

Committee Statement

Resolution: FR-8731-NFPA 70-2021

Statement: These exceptions previously were located in Section 500.6 and they should be relocated to 500.8, since they are exceptions to what equipment is allowed to be installed in the hazardous location, not an exception to the definition of the Group classification stated in 500.6. In addition, second level subdivisions are required to have titles, in accordance with NEC® Style Manual 2.1.5.2 and have been added accordingly. Finally, Section 4.1.4 of the 2020 NEC(r) Style Manual prohibits references to an entire article, with the exception of Article 100. As the equipment requirements are found in Part III of the division based articles, substituting "Part III of Articles 501, 502, or 503" accomplishes the requirement without changing the intent of the code section. In 500.8(B)(6) the informational note is deleted and the word “both” is changed to “the specific materials” to better clarify the code language and delete the unnecessary informational note. Additionally the language was changed to make it clear that if you have vapors or gases simultaneously with combustible dust, that’s when the specific evaluation of the combined presence is required. Titles have been added to items 1 through 6 for compliance with the NEC Style Manual.

Public Input No. 916-NFPA 70-2020 [Section No. 500.8(C)(3)]

(3) Material Classification Group.

The marking shall specify the applicable material classification group(s) or specific gas, vapor, dust, or fiber/flying in accordance with 500.6.

Exception: Fixed luminaires marked for use only in Class I, Division 2 or Class II, Division 2 locations shall not be required to indicate the group.

Informational Note: A specific gas, vapor, dust, or fiber/flying is typically identified by the generic name, chemical formula, CAS number, or combination thereof.

*** Similar to what is referenced in 505.20 regarding the suitability for Group IIC equipment in IIB / IIA and IIB in IIA applications, NEC to update 500.8.C.3 to reflect the Group A suitability for B,C and D etc.
Stating this in only the 505 Zone section and not in the 500 section causes doubt/confusion.

Statement of Problem and Substantiation for Public Input

Similar to what is referenced in 505.20 regarding the suitability for Group IIC equipment in IIB/IIA and IIB in IIA applications, NEC to update 500.8.C.3 to reflect the Group A suitability for B,C and D etc. Stating this in only the 505 Zone section and not in the 500 section causes doubt/confusion.

Submitter Information Verification

Submitter Full Name: jebidiah randall
Organization: Chevron
Street Address:
City:
State:
Zip:
Submittal Date: Thu Apr 30 13:03:16 EDT 2020
Committee: NEC-P14

Committee Statement

Resolution: No proposed changes were submitted. It is unclear what this PI is suggesting be changed in 500.8.

Public Input No. 2649-NFPA 70-2020 [Section No. 500.8(E)(1)]

(1) Equipment Provided with Threaded Entries for NPT-Threaded Conduit or Fittings.

For equipment provided with threaded entries for NPT-threaded conduit or fittings, listed conduit, listed conduit fittings, or listed cable fittings shall be used. All NPT-threaded conduit and fittings shall be threaded with a National (American) Standard Pipe Taper (NPT) thread.

NPT-threaded entries into explosionproof equipment shall be made up with at least five threads fully engaged.

Exception No. 1 : For listed explosionproof equipment, joints with factory-threaded NPT entries shall be made up with at least four and one-half threads fully engaged.

Exception No 2. Conduit couplings shall not be required to be theaded with a National (American) Standard Pipe Taper (NPT) thread

Informational Note No. 1: Thread specifications for male NPT threads are located in ASME B1.20.1-2013, *Pipe Threads, General Purpose (Inch)*.

Informational Note No. 2: Female NPT-threaded entries use a modified National Standard Pipe Taper (NPT) thread with thread form per ASME B1.20.1-2013, *Pipe Threads, General Purpose (Inch)*. See ANSI/UL 1203-2015, *Explosion-Proof and Dust-Ignition-Proof Electrical Equipment for Use in Hazardous (Classified) Locations*.

Statement of Problem and Substantiation for Public Input

This section requires that conduit and conduit fittings used in Classified locations be National (American) Standard Pipe Taper (NPT) thread. UL 6 requires that standard conduit couplings have a straight thread. The existing language prohibits the use of standard conduit couplings. This exception will permit the long standing practice of using standard conduit couplings in classified areas.

Submitter Information Verification

Submitter Full Name: Don Ganiere
Organization: [Not Specified]
Street Address:
City:
State:
Zip:
Submittal Date: Wed Aug 26 19:38:25 EDT 2020
Committee: NEC-P14

Committee Statement

Resolution: Section 500.8(E)(1) is describing external threaded conduit and fittings for engagement with internally threaded conduit entries in electrical equipment enclosures. Conduit couplings cannot be connected to an internal thread except via another externally threaded fitting or listed conduit. Such a connection is permitted and is covered in 501.15(A)(1).

Public Input No. 1974-NFPA 70-2020 [Section No. 500.8(E)(3)]

(3) Unused Openings.

All unused openings shall be closed ~~with listed metal close~~ with close -up plugs listed for the location . The close-up plug engagement shall comply with 500.8(E)(1) or (E)(2).

Exception: Equipment that is listed and supplied with close-up plugs as part of their listing shall be permitted to be used.

Statement of Problem and Substantiation for Public Input

Listed close-up plugs should be required to be listed for the location. Listed equipment may employ close-up plugs that are not independently listed for the location when evaluated as part as the equipment listing. “Listed for the location” will address the material requirements and therefore “metal” is not needed to be stated explicity in the Code.

Submitter Information Verification

Submitter Full Name: Megan Hayes
Organization: Nema
Street Address:
City:
State:
Zip:
Submittal Date: Wed Jul 22 14:48:31 EDT 2020
Committee: NEC-P14

Committee Statement

Resolution: FR-8384-NFPA 70-2021

Statement: Requiring close-up plugs to be listed for the location makes it clear that the plugs must be compatible with the class and division where they are installed. CMP-14 does not concur with the recommended exception. Equipment is often shipped with temporary plugs which may not be listed for the location. The wording of the exception could be construed to allow these close-up plugs to remain. Listed equipment with integrated close-up plugs or blanking elements is controlled by 110.3(B).

Public Input No. 4073-NFPA 70-2020 [Section No. 500.8(F)]

(F) Optical Fiber Cables.

An optical fiber cable, with or without current-carrying conductors (composite optical fiber cable), shall be installed to address the associated fire hazard and sealed to address the associated explosion hazard in accordance ~~with the requirements of~~ with Article 500, 501, 502, or 503, as applicable.

Statement of Problem and Substantiation for Public Input

Deleting the words "the requirements of" does not change the meaning of the section.

Submitter Information Verification

Submitter Full Name: David Williams
Organization: Delta Charter Township
Street Address:
City:
State:
Zip:
Submittal Date: Wed Sep 09 20:02:10 EDT 2020
Committee: NEC-P14

Committee Statement

Resolution: FR-8476-NFPA 70-2021
Statement: This requirement has been revised to comply with the NEC Style Manual regarding references to entire articles.

Public Input No. 420-NFPA 70-2020 [Section No. 500.8(F)]

(F) Optical Fiber Cables.

An optical fiber cable, with or without current-carrying conductors (~~composite~~ hybrid optical fiber cable), shall be installed to address the associated fire hazard and sealed to address the associated explosion hazard in accordance with the requirements of Article 500, 501, 502, or 503, as applicable.

Statement of Problem and Substantiation for Public Input

Public Input No. 416 proposes to change “composite optical fiber cable” to “hybrid optical fiber cable” in order to align the NEC with current U.S and international definitions. Acceptance of PI 416 necessitates changing “composite optical fiber cable” to “hybrid optical fiber cable” throughout the NEC. This is a coordinating Public Input to PI 416.

Related Public Inputs for This Document

Related Input	Relationship
Public Input No. 416-NFPA 70-2020 [Definition: Cable, Optical Fiber, Composite.]	Changes definition of composite optical fiber cable to hybrid optical fiber cable
Public Input No. 417-NFPA 70-2020 [Section No. 770.3(C)]	Coordinates with the change of composite optical fiber cable to hybrid optical fiber cable in PI 416
Public Input No. 418-NFPA 70-2020 [Section No. 770.133(B)]	Coordinates with the change of composite optical fiber cable to hybrid optical fiber cable in PI 416
Public Input No. 419-NFPA 70-2020 [Section No. 830.1]	Coordinates with the change of composite optical fiber cable to hybrid optical fiber cable in PI 416
Public Input No. 421-NFPA 70-2020 [Section No. 505.9(F)]	Coordinates with the change of composite optical fiber cable to hybrid optical fiber cable in PI 416
Public Input No. 422-NFPA 70-2020 [Section No. 506.9(F)]	Coordinates with the change of composite optical fiber cable to hybrid optical fiber cable in PI 416
Public Input No. 423-NFPA 70-2020 [Section No. 640.21(B)]	Coordinates with the change of composite optical fiber cable to hybrid optical fiber cable in PI 416
Public Input No. 424-NFPA 70-2020 [Section No. 640.21(C)]	Coordinates with the change of composite optical fiber cable to hybrid optical fiber cable in PI 416
Public Input No. 425-NFPA 70-2020 [Section No. 640.42(B)]	Coordinates with the change of composite optical fiber cable to hybrid optical fiber cable in PI 416
Public Input No. 426-NFPA 70-2020 [Section No. 640.42(C)]	Coordinates with the change of composite optical fiber cable to hybrid optical fiber cable in PI 416
Public Input No. 416-NFPA 70-2020 [Definition: Cable, Optical Fiber, Composite.]	
Public Input No. 417-NFPA 70-2020 [Section No. 770.3(C)]	
Public Input No. 418-NFPA 70-2020 [Section No. 770.133(B)]	
Public Input No. 419-NFPA 70-2020 [Section No. 830.1]	

Public Input No. 421-NFPA 70-2020 [Section No. 505.9(F)]

Public Input No. 422-NFPA 70-2020 [Section No. 506.9(F)]

Public Input No. 423-NFPA 70-2020 [Section No. 640.21(B)]

Public Input No. 424-NFPA 70-2020 [Section No. 640.21(C)]

Public Input No. 425-NFPA 70-2020 [Section No. 640.42(B)]

Public Input No. 426-NFPA 70-2020 [Section No. 640.42(C)]

Submitter Information Verification

Submitter Full Name: Stanley Kaufman
Organization: CableSafe, Inc./OFS
Affiliation: Insulated Cable Engineers Association (ICEA)
Street Address:
City:
State:
Zip:
Submittal Date: Tue Feb 04 13:01:18 EST 2020
Committee: NEC-P14

Committee Statement

Resolution: The change proposed throughout the Code of “hybrid” to replace “composite” is dependent on acceptance of PI 417 by another CMP. TG3 would support the change if done universally.

Public Input No. 4414-NFPA 70-2020 [Section No. 500.8(F)]

(F) Optical Fiber Cables.

An optical fiber cable, with or without current-carrying conductors (composite optical fiber cable), shall be installed to address the associated fire hazard and sealed to address the associated explosion hazard in accordance with ~~the requirements~~ Part II of Article ~~500~~ ~~,~~ 501, 502, or 503, as applicable.

Statement of Problem and Substantiation for Public Input

Section 4.1.4 of the 2020 NEC(r) Style Manual prohibits references to an entire article, with the exception of Article 100. The wiring methods for the division classified locations are found in Part II of Articles 501, 502 and 503 as noted. There are no specific optical fiber installation requirements in Article 500, other than this section which is being revised, so reference to Article 500 was deleted as it is a circular reference and not necessary for the application of the code rule.

Submitter Information Verification

Submitter Full Name: Richard Holub
Organization: The DuPont Company, Inc.
Street Address:
City:
State:
Zip:
Submittal Date: Thu Sep 10 12:28:53 EDT 2020
Committee: NEC-P14

Committee Statement

Resolution: FR-8476-NFPA 70-2021
Statement: This requirement has been revised to comply with the NEC Style Manual regarding references to entire articles.

Public Input No. 513-NFPA 70-2020 [Section No. 500.8(G)]

(G) Equipment Involving Optical Radiation.

For equipment involving sources of optical radiation (such as laser or LED sources) in the wavelength range from 380 nm to 10 µm, the risk of ignition from optical radiation shall be considered for all electrical parts and circuits that may be exposed to the radiation, both inside and outside the optical equipment. This includes optical equipment, which itself is located outside the explosive atmosphere, but its emitted optical radiation enters such atmospheres.

Informational Note: For additional information on types of protection that can be applied to minimize the risk of ignition in explosive atmospheres from optical radiation, see ANSI/UL 60079-28-2017, *Explosive Atmospheres — Part 28: Protection of Equipment and Transmission Systems Using Optical Radiation*.

Exception: All luminaires (fixed, portable, or transportable) and hand lights ~~intended to be supplied by mains (~~ with ~~or without galvanic isolation) or powered by batteries, with~~ any continuous divergent light source, including LEDs, shall be excluded from this requirement.

Statement of Problem and Substantiation for Public Input

We don't use "mains" in the NEC, and we don't enforce "intentions."

Submitter Information Verification

Submitter Full Name: Ryan Jackson
Organization: Ryan Jackson
Street Address:
City:
State:
Zip:
Submittal Date: Fri Feb 21 12:11:59 EST 2020
Committee: NEC-P14

Committee Statement

Resolution: FR-8346-NFPA 70-2021

Statement: The requirement was revised for clarity and technical accuracy. In the exception the phrase “intended to be supplied by mains (with or without galvanic isolation) or powered by batteries” is not necessary in the application of the Code section and is therefore removed. This is purely an editorial correction and is not intended to change the code requirement. section. The informational note is reworded to meet the requirements of NEC® Style Manual 3.1.3.1. This is simply an editorial change and not intended to change the intent of the informational note.

Public Input No. 4410-NFPA 70-2020 [Section No. 500.8 [Excluding any Sub-Sections]]

~~Articles~~ 500 ~~through~~ 504 - The division based hazardous location articles require equipment construction and installation that ensure safe performance under conditions of proper use and maintenance.

Informational Note No. 1: It is important that inspection authorities and users exercise more than ordinary care with regard to installation and maintenance.

Informational Note No. 2: Since there is no consistent relationship between explosion properties and ignition temperature, the two are independent requirements.

Informational Note No. 3: Low ambient conditions require special consideration. Explosionproof or dust-ignitionproof equipment may not be suitable for use at temperatures lower than -25ºC (-13ºF) unless they are identified for low-temperature service. However, at low ambient temperatures, flammable concentrations of vapors may not exist in a location classified as Class I, Division 1 at normal ambient temperature.

Statement of Problem and Substantiation for Public Input

Section 4.1.4 of the 2020 NEC(r) Style Manual prohibits references to an entire article, with the exception of Article 100. Replacing "Articles 500 through 504" with the more generic "the division based hazardous location articles" seems to accomplish the style manual requirements without changing the intent of the section.

Submitter Information Verification

Submitter Full Name: Richard Holub
Organization: The DuPont Company, Inc.
Street Address:
City:
State:
Zip:
Submittal Date: Thu Sep 10 12:22:00 EDT 2020
Committee: NEC-P14

Committee Statement

Resolution: FR-8632-NFPA 70-2021
Statement: Text has been revised to provide mandatory language and comply with 4.1.4 of the NEC Style Manual.

Public Input No. 516-NFPA 70-2020 [Section No. 500.8 [Excluding any Sub-Sections]]

~~Articles 500 through 504 require equipment construction and installation that ensure safe performance under conditions of proper use and maintenance.~~

Informational Note No. 1: It is important that inspection authorities and users exercise more than ordinary care with regard to installation and maintenance.

Informational Note No. 2: Since there is no consistent relationship between explosion properties and ignition temperature, the two are independent requirements.

Informational Note No. 3: Low ambient conditions require special consideration. Explosionproof or dust-ignitionproof equipment may not be suitable for use at temperatures lower than -25ºC (-13ºF) unless they are identified for low-temperature service. However, at low ambient temperatures, flammable concentrations of vapors may not exist in a location classified as Class I, Division 1 at normal ambient temperature.

Statement of Problem and Substantiation for Public Input

This statement holds true for every single article in the Code and it contains no requirements.

Submitter Information Verification

Submitter Full Name: Ryan Jackson
Organization: Ryan Jackson
Street Address:
City:
State:
Zip:
Submittal Date: Fri Feb 21 12:19:54 EST 2020
Committee: NEC-P14

Committee Statement

Resolution: FR-8632-NFPA 70-2021
Statement: Text has been revised to provide mandatory language and comply with 4.1.4 of the NEC Style Manual.

Public Input No. 2133-NFPA 70-2020 [New Section after 501.1]

501.2 Definitions.

Process-Connected Electrical Instrument or Control Device. Equipment that uses electrical current for control and is connected to process equipment.

Informational Note: Electrical instruments and control devices typically measure and monitor flow, pressure, temperature, or other process analysis.

Process Equipment. Piping, vessels, pumps and similar equipment which contains flammable liquids, gases or vapors.

Process Seal. A listed device intended to prevent the migration of flammable liquids, gases or vapors from the designed containment into the external electrical system through the process-connected electrical instrument or control device.

Statement of Problem and Substantiation for Public Input

This information was vaguely described in Section 501.17 in the 2020 NEC. Per the style manual, it should be located in Section 501.2 since it is only used in this Article.

This is a companion proposal for one revising 501.17.

Related Public Inputs for This Document

Related Input	Relationship
Public Input No. 103-NFPA 70-2019 [Section No. 501.17]	

Submitter Information Verification

Submitter Full Name: Paul Guidry
Organization: Fluor Enterprises, Inc.
Affiliation: Associated Builders and Contractors
Street Address:
City:
State:
Zip:
Submittal Date: Sun Aug 02 13:48:05 EDT 2020
Committee: NEC-P14

Committee Statement

Resolution: The current text in 501.17 is not unclear and creation of the proposed definitions in Article 100 does not improve the usability of the code and may have unintended consequences. Furthermore, the public input is creating a term that is not used in the current text nor in the proposed Public Input 103, which violates the NEC Style Manual.

Public Input No. 2510-NFPA 70-2020 [New Section after 501.1]

501.4 Documentation

All areas designated as hazardous (classified) locations shall be properly documented. This documentation shall be available to those authorized to design, install, inspect, maintain, or operate electrical equipment at the location.

Statement of Problem and Substantiation for Public Input

The requirement for documentation is found in 500.4 but the requirement is important enough to be included in each Article; 501, 502, 503, 505, and 506. The requirement should be consistent in all five locations.

Related Public Inputs for This Document

Related Input	Relationship
Public Input No. 2513-NFPA 70-2020 [Section No. 505.4]	
Public Input No. 2511-NFPA 70-2020 [New Section after 502.1]	
Public Input No. 2518-NFPA 70-2020 [New Section after 503.1]	
Public Input No. 2511-NFPA 70-2020 [New Section after 502.1]	
Public Input No. 2513-NFPA 70-2020 [Section No. 505.4]	
Public Input No. 2518-NFPA 70-2020 [New Section after 503.1]	

Submitter Information Verification

Submitter Full Name: John Simmons
Organization: Florida East Coast JATC
Street Address:
City:
State:
Zip:
Submittal Date: Sun Aug 23 17:21:19 EDT 2020
Committee: NEC-P14

Committee Statement

Resolution: The recommended text is currently covered in 500.4.

Public Input No. 1616-NFPA 70-2020 [Section No. 501.1]

501.1 Scope.

Article 501 covers the requirements for electrical and electronic equipment and wiring for all voltages in Class I, Division 1 and 2 locations where ~~fire or explosion hazards may exist due to flammable gases or vapors or flammable liquids~~ flammable gases, flammable liquid–produced vapors, or combustible liquid–produced vapors are or may be present in the air in quantities sufficient to produce explosive or ignitible mixtures .

Informational Note: For the requirements for electrical and electronic equipment and wiring for all voltages in Zone 0, Zone 1, or Zone 2 hazardous (classified) locations where fire or explosion hazards may exist due to flammable gases or vapors or flammable liquids, refer to Article 505.

Statement of Problem and Substantiation for Public Input

Revised text to the scope was 'extracted' without edits from 500.5(B). This way the Scope of Article 501 matches Article 500.

Submitter Information Verification

Submitter Full Name: Mike Holt
Organization: Mike Holt Enterprises Inc
Street Address:
City:
State:
Zip:
Submittal Date: Wed Jun 24 13:16:35 EDT 2020
Committee: NEC-P14

Committee Statement

Resolution: FR-8347-NFPA 70-2021

Statement: The scope statement has been reworded to mirror the language in 500.5(B) for correlation. Section 4.1.4 of the 2020 NEC® Style Manual prohibits references to an entire article, with the exception of Article 100. Replacing "Article 501" with "This article" accomplishes the requirement without changing the intent of the Code. The informational note was updated to point users to the scope statement of Article 505 to comply and the order of the informational note was revised to comply with Section 4.1.3 of the NEC® Style Manual. CMP-14 understands that article scope sections are the responsibility of the Correlating Committee.

Public Input No. 4417-NFPA 70-2020 [Section No. 501.1]

501.1 Scope.

~~Article~~ ~~501~~ - This article covers the requirements for electrical and electronic equipment and wiring for all voltages in Class I, Division 1 and 2 locations where fire or explosion hazards may exist due to flammable gases or vapors or flammable liquids.

Informational Note: - ~~For~~ See 505.1 f or the requirements for electrical and electronic equipment and wiring for all voltages in Zone 0, Zone 1, or Zone 2 hazardous (classified) locations where fire or explosion hazards may exist due to flammable gases or vapors or flammable liquids~~, refer to Article~~ ~~505~~ .

Statement of Problem and Substantiation for Public Input

Section 4.1.4 of the 2020 NEC(r) Style Manual prohibits references to an entire article, with the exception of Article 100. Replacing "Article 501" with "This article" accomplishes the requirement without changing the intent of the Code. The informational note was updated to point users to the scope statement of Article 505 to comply and the order of the informational note was revised to comply with Section 4.1.3 of the NEC(r) Style Manual.

Related Public Inputs for This Document

Related Input	Relationship
Public Input No. 4431-NFPA 70-2020 [Section No. 503.1]	

Submitter Information Verification

Submitter Full Name: Richard Holub
Organization: The DuPont Company, Inc.
Street Address:
City:
State:
Zip:
Submittal Date: Thu Sep 10 12:38:15 EDT 2020
Committee: NEC-P14

Committee Statement

Resolution: FR-8347-NFPA 70-2021

Statement: The scope statement has been reworded to mirror the language in 500.5(B) for correlation. Section 4.1.4 of the 2020 NEC® Style Manual prohibits references to an entire article, with the exception of Article 100. Replacing "Article 501" with "This article" accomplishes the requirement without changing the intent of the Code. The informational note was updated to point users to the scope statement of Article 505 to comply and the order of the informational note was revised to comply with Section 4.1.3 of the NEC® Style Manual. CMP-14 understands that article scope sections are the responsibility of the Correlating Committee.

Public Input No. 1985-NFPA 70-2020 [Section No. 501.10(A)]

(A) Class I, Division 1.

(1) General.

In Class I, Division 1 locations, the following wiring methods shall be permitted:

(1) Threaded rigid metal conduit (Type RMC) or threaded steel intermediate metal conduit (Type IMC).

Exception: Type PVC conduit, Type RTRC conduit, and Type HDPE conduit shall be permitted where encased in a concrete envelope a minimum of 50 mm (2 in.) thick and provided with not less than 600 mm (24 in.) of cover measured from the top of the conduit to grade. The concrete encasement shall be permitted to be omitted where subject to the provisions of 514.8, Exception No. 2, or 515.8(A). Threaded rigid metal conduit or threaded steel intermediate metal conduit shall be used for the last 600 mm (24 in.) of the underground run to emergence or to the point of connection to the aboveground raceway. An equipment grounding conductor shall be included to provide for electrical continuity of the raceway system and for grounding of non–current-carrying metal parts.

(2) Type MI cable terminated with fittings listed for the location. Type MI cable shall be installed and supported in a manner to avoid tensile stress at the termination fittings.

(3) In industrial establishments with restricted public access, where the conditions of maintenance and supervision ensure that only qualified persons service the installation, Type MC-HL cable listed for use in Class I, Zone 1 or Division 1 locations, with a gas/vaportight continuous corrugated metallic sheath, an overall jacket of suitable polymeric material, and a separate equipment grounding conductor(s) in accordance with 250.122, and terminated with fittings listed for the application. Type MC-HL cable shall be installed in accordance with the provisions of Article 330, Part II.

(4) In industrial establishments with restricted public access, where the conditions of maintenance and supervision ensure that only qualified persons service the installation, Type ITC-HL cable listed for use in Class I, Division 1 or Zone 1 locations, with a gas/vaportight continuous corrugated metallic sheath and an overall jacket of suitable polymeric material, and terminated with fittings listed for the application, and installed in accordance with 727.4.

(5) Optical fiber cable Types OFNP, OFCP, OFNR, OFCR, OFNG, OFCG, OFN, and OFC shall be permitted to be installed in raceways in accordance with 501.10(A). These optical fiber cables shall be sealed in accordance with 501.15.

(6) In industrial establishments with restricted public access, where the conditions of maintenance and supervision ensure that only qualified persons service the installation, for applications limited to 600 volts nominal or less, and where the cable is not subject to physical damage, and terminated with fittings listed for the location, Type TC-ER-HL cable. Type TC-ER-HL cable shall be listed for use in Class I, Division 1 or Zone 1 locations and shall be installed in accordance with 336.10.

Informational Note: See the information on construction, testing, and marking of cables and cable fittings in ANSI/UL 2225-2013, *Cables and Cable-Fittings for Use in Hazardous (Classified) Locations*.

(7) In industrial establishments with restricted public access, where the conditions of maintenance and supervision ensure that only qualified persons service the installation, listed Type P cable with metal braid armor, with an overall jacket, terminated with fittings listed for the location, and installed in accordance with 337.10.

Informational Note No. 1: For information on construction, testing, and marking of Type P cable, see ANSI/UL 1309-2017, *Marine Shipboard Cable*.

Informational Note No. 2: For information on construction, testing, and marking of cable fittings, see ANSI/UL 2225-2013, *Cables and Cable-Fittings for Use in Hazardous (Classified) Locations*.

(2) Flexible Connections.

Where necessary to employ flexible connections, as at motor terminals, one of the following shall be permitted:

(1) Flexible fittings listed for the location.

(2) Flexible cord in accordance with the provisions of 501.140, terminated with cord connectors listed for the location.

(3) In industrial establishments with restricted public access, where the conditions of maintenance and supervision ensure that only qualified persons service the installation, for applications limited to 600 volts nominal or less, and where the cable is not subject to physical damage, and terminated with fittings listed for the location. Type TC-ER-HL cable shall be listed for use in Class I, Division 1 or Zone 1 locations and shall be installed in accordance with 336.10.

Informational Note: See the information on construction, testing, and marking of cables and cable fittings in ANSI/UL 2225-2013, *Cables and Cable-Fittings for Use in Hazardous (Classified) Locations*.

(4) In industrial establishments with restricted public access, where the conditions of maintenance and supervision ensure that only qualified persons service the installation, listed Type P cable with metal braid armor, with an overall jacket, terminated with fittings listed for the location, and installed in accordance with 337.10.

Informational Note No. 1: For information on construction, testing, and marking of Type P cable, see ANSI/UL 1309-2017, *Marine Shipboard Cable*.

Informational Note No. 2: For information on construction, testing, and marking of cable fittings, see ANSI/UL 2225-2013, *Cables and Cable-Fittings for Use in Hazardous (Classified) Locations*.

(3) Boxes and Fittings.

All boxes and fittings shall be approved for Class I, Division 1.

Informational Note No.1 : For entry into enclosures required to be explosionproof, see the information on construction, testing, and marking of cables, explosionproof cable fittings, and explosionproof cord connectors in ANSI/UL 2225-2013, *Cables and Cable-Fittings for Use in Hazardous (Classified) Locations*.

Informational Note No. 2: For entry into enclosures required to be explosionproof, see the information on construction, testing, and marking of explosionproof conduit fittings in ANSI/UL 1203-2015, Explosion-Proof and Dust-Ignition-Proof Electrical Equipment for Use in Hazardous (Classified) Locations.

Statement of Problem and Substantiation for Public Input

Section 501.10(A)(3) is relevant to Section 501.10(A)(1) which permits conduit.

Submitter Information Verification

Submitter Full Name: Megan Hayes
Organization: Nema
Street Address:
City:
State:
Zip:
Submittal Date: Thu Jul 23 09:10:06 EDT 2020
Committee: NEC-P14

Committee Statement

Resolution: FR-8452-NFPA 70-2021

Statement: The term “identified” is a more accurate and consistent term than “approved”. Informational Note No. 1 is reworded to meet the requirements of NEC Style Manual 3.1.3.1. This is simply an editorial change and not intended to change the intent of the informational note.

Public Input No. 2495-NFPA 70-2020 [Section No. 501.10(A)(1)]

(1) General.

In Class I, Division 1 locations, the following wiring methods shall be permitted:

(1) Threaded rigid metal conduit (Type RMC) or threaded steel intermediate metal conduit (Type IMC).

Exception: Type PVC conduit, Type RTRC conduit, and Type HDPE conduit shall be permitted where encased in a concrete envelope a minimum of 50 mm (2 in.) thick and provided with not less than 600 mm (24 in.) of cover measured from the top of the conduit to grade. The concrete encasement shall be permitted to be omitted where subject to the provisions of 514.8, Exception No. 2, or 515.8(A). Threaded rigid metal conduit or threaded steel intermediate metal conduit shall be used for the last 600 mm (24 in.) of the underground run to emergence or to the point of connection to the aboveground raceway. An equipment grounding conductor shall be included to provide for electrical continuity of the raceway system and for grounding of non–current-carrying metal parts.

(2) Type MI cable terminated with fittings listed for the location. Type MI cable shall be installed and supported in a manner to avoid tensile stress at the termination fittings.

(3) In industrial establishments ~~with restricted public access, where the conditions of maintenance and supervision ensure that only qualified persons service the installation,~~ Type MC-HL cable listed for use in Class I, Zone 1 or Division 1 locations, with a gas/vaportight continuous corrugated metallic sheath, an overall jacket of suitable polymeric material, and a separate equipment grounding conductor(s) in accordance with 250.122, and terminated with fittings listed for the application. Type MC-HL cable shall be installed in accordance with the provisions of Article 330, Part II.

(4) In industrial establishments ~~with restricted public access, where the conditions of maintenance and supervision ensure that only qualified persons service the installation,~~ Type ITC-HL cable listed for use in Class I, Division 1 or Zone 1 locations, with a gas/vaportight continuous corrugated metallic sheath and an overall jacket of suitable polymeric material, and terminated with fittings listed for the application, and installed in accordance with 727.4.

(5) Optical fiber cable Types OFNP, OFCP, OFNR, OFCR, OFNG, OFCG, OFN, and OFC shall be permitted to be installed in raceways in accordance with 501.10(A). These optical fiber cables shall be sealed in accordance with 501.15.

(6) In industrial establishments ~~with restricted public access, where the conditions of maintenance and supervision ensure that only qualified persons service the installation,~~ for applications limited to 600 volts nominal or less, and where the cable is not subject to physical damage, and terminated with fittings listed for the location, Type TC-ER-HL cable. Type TC-ER-HL cable shall be listed for use in Class I, Division 1 or Zone 1 locations and shall be installed in accordance with 336.10.

Informational Note: See the information on construction, testing, and marking of cables and cable fittings in ANSI/UL 2225-2013, *Cables and Cable-Fittings for Use in Hazardous (Classified) Locations*.

(7) In industrial establishments ~~with restricted public access, where the conditions of maintenance and supervision ensure that only qualified persons service the installation,~~ listed Type P cable with metal braid armor, with an overall jacket, terminated with fittings listed for the location, and installed in accordance with 337.10.

Informational Note No. 1: For information on construction, testing, and marking of Type P cable, see ANSI/UL 1309-2017, *Marine Shipboard Cable*.

Informational Note No. 2: For information on construction, testing, and marking of cable fittings, see ANSI/UL 2225-2013, *Cables and Cable-Fittings for Use in Hazardous (Classified) Locations*.

Statement of Problem and Substantiation for Public Input

The deletion of the text in this PI is dependent on the addition of the definition of industrial

establishments to Article 100 Part III Hazardous (Classified) Locations. See PI 2494.

Related Public Inputs for This Document

Related Input	Relationship
Public Input No. 2494-NFPA 70-2020 [New Definition after Definition: Inherently Safe Optical Ra...]	

Submitter Information Verification

Submitter Full Name: John Simmons
Organization: Florida East Coast JATC
Street Address:
City:
State:
Zip:
Submittal Date: Sun Aug 23 15:48:53 EDT 2020
Committee: NEC-P14

Committee Statement

Resolution: The recommendation is predicated on the inclusion of a new definition of Industrial Establishments in Article 100. This requires action by CMP-1 during the First Draft phase of the revision process. If accepted, comments will be submitted for action during the Second Draft phase of the revision process.

Public Input No. 2521-NFPA 70-2020 [Section No. 501.10(A)(1)]

(1) General.

In Class I, Division 1 locations, the following wiring methods shall be permitted:

(1) Threaded rigid metal conduit (Type RMC) or threaded steel intermediate metal conduit (Type IMC).

(2) ~~Exception:~~ Type PVC conduit, Type RTRC conduit, and Type HDPE conduit shall be permitted where encased in a concrete envelope a minimum of 50 mm (2 in.) thick and provided with not less than 600 mm (24 in.) of cover measured from the top of the conduit to grade. The concrete encasement shall be permitted to be omitted where subject to the provisions of 514.8 , Exception No. 2, or 515.8(A) . Threaded rigid metal conduit or threaded steel intermediate metal conduit shall be used for the last 600 mm (24 in.) of the underground run to emergence or to the point of connection to the aboveground raceway. An equipment grounding conductor shall be included to provide for electrical continuity of the raceway system and for grounding of non–current-carrying metal parts.

(3) Type MI cable terminated with fittings listed for the location. Type MI cable shall be installed and supported in a manner to avoid tensile stress at the termination fittings.

(4) In industrial establishments with restricted public access, where the conditions of maintenance and supervision ensure that only qualified persons service the installation, Type MC-HL cable listed for use in Class I, Zone 1 or Division 1 locations, with a gas/vaportight continuous corrugated metallic sheath, an overall jacket of suitable polymeric material, and a separate equipment grounding conductor(s) in accordance with 250.122 , and terminated with fittings listed for the application. Type MC-HL cable shall be installed in accordance with the provisions of Article 330 , Part II.

(5) In industrial establishments with restricted public access, where the conditions of maintenance and supervision ensure that only qualified persons service the installation, Type ITC-HL cable listed for use in Class I, Division 1 or Zone 1 locations, with a gas/vaportight continuous corrugated metallic sheath and an overall jacket of suitable polymeric material, and terminated with fittings listed for the application, and installed in accordance with 727.4 .

(6) Optical fiber cable Types OFNP, OFCP, OFNR, OFCR, OFNG, OFCG, OFN, and OFC shall be permitted to be installed in raceways in accordance with 501.10(A) . These optical fiber cables shall be sealed in accordance with 501.15 .

(7) In industrial establishments with restricted public access, where the conditions of maintenance and supervision ensure that only qualified persons service the installation, for applications limited to 600 volts nominal or less, and where the cable is not subject to physical damage, and terminated with fittings listed for the location, Type TC-ER-HL cable. Type TC-ER-HL cable shall be listed for use in Class I, Division 1 or Zone 1 locations and shall be installed in accordance with 336.10 .

Informational Note: See the information on construction, testing, and marking of cables and cable fittings in ANSI/UL 2225-2013, *Cables and Cable-Fittings for Use in Hazardous (Classified) Locations* .

(8) In industrial establishments with restricted public access, where the conditions of maintenance and supervision ensure that only qualified persons service the installation, listed Type P cable with metal braid armor, with an overall jacket, terminated with fittings listed for the location, and installed in accordance with 337.10 .

Informational Note No. 1: For information on construction, testing, and marking of Type P cable, see ANSI/UL 1309-2017, *Marine Shipboard Cable* .

Informational Note No. 2: For information on construction, testing, and marking of cable fittings, see ANSI/UL 2225-2013, *Cables and Cable-Fittings for Use in Hazardous (Classified) Locations* .

Statement of Problem and Substantiation for Public Input

The text in the exception is, in reality a permitted wiring method. Making it an exception adds a little confusion. The style manual mandate is to use exceptions sparingly. Changing this exception to a permitted wiring method places the requirement where it belongs.

Submitter Information Verification

Submitter Full Name: John Simmons
Organization: Florida East Coast JATC
Street Address:
City:
State:
Zip:
Submittal Date: Sun Aug 23 20:32:53 EDT 2020
Committee: NEC-P14

Committee Statement

Resolution: FR-8467-NFPA 70-2021

Statement: The exception to (1) has been converted into a separate list item. Requirements for cable tray applications have been added to list items (3), (6) and (7). The informational notes to list items (6) and (7) are reworded to meet the requirements of NEC® Style Manual 3.1.3.1. This is simply an editorial change and not intended to change the intent of the informational note. The reference to 337.10 in (7) has been corrected to Part II of Article 337 for technical accuracy.

Public Input No. 2544-NFPA 70-2020 [Section No. 501.10(A)(1)]

(1) General.

In Class I, Division 1 locations, the following wiring methods shall be permitted:

(1) Threaded rigid metal conduit (Type RMC) or threaded steel intermediate metal conduit (Type IMC).

Exception: Type PVC conduit, Type RTRC conduit, and Type HDPE conduit shall be permitted where encased in a concrete envelope a minimum of 50 mm (2 in.) thick and provided with not less than 600 mm (24 in.) of cover measured from the top of the conduit to grade. The concrete encasement shall be permitted to be omitted where subject to the provisions of 514.8, Exception No. 2, or 515.8(A). Threaded rigid metal conduit or threaded steel intermediate metal conduit shall be used for the last 600 mm (24 in.) of the underground run to emergence or to the point of connection to the aboveground raceway. An equipment grounding conductor shall be included to provide for electrical continuity of the raceway system and for grounding of non–current-carrying metal parts.

(2) Type MI cable terminated with fittings listed for the location. Type MI cable shall be installed and supported in a manner to avoid tensile stress at the termination fittings.

(3) In industrial establishments with restricted public access, where the conditions of maintenance and supervision ensure that only qualified persons service the installation, Type MC-HL cable listed for use in Class I, Zone 1 or Division 1 locations, with a gas/vaportight continuous corrugated metallic sheath, an overall jacket of suitable polymeric material, and a separate equipment grounding conductor(s) in accordance with 250.122, and terminated with fittings listed for the application. Type MC-HL cable shall be installed in accordance with the provisions of Article 330, Part II.

(4) In industrial establishments with restricted public access, where the conditions of maintenance and supervision ensure that only qualified persons service the installation, Type ITC-HL cable listed for use in Class I, Division 1 or Zone 1 locations, with a gas/vaportight continuous corrugated metallic sheath and an overall jacket of suitable polymeric material, and terminated with fittings listed for the application, and installed in accordance with 727.4.

(5) Optical fiber cable Types OFNP, OFCP, OFNR, OFCR, OFNG, OFCG, OFN, and OFC shall be permitted to be installed in raceways in accordance with 501.10(A). These optical fiber cables shall be sealed in accordance with 501.15.

(6) In industrial establishments with restricted public access, where the conditions of maintenance and supervision ensure that only qualified persons service the installation, for applications limited to 600 volts nominal or less, and where the cable is not subject to physical damage, and terminated with fittings listed for the location, Type TC-ER-HL cable. Type TC-ER-HL cable shall be listed for use in Class I, Division 1 or Zone 1 locations and shall be installed in accordance with 336.10.

Informational Note: See the information on construction, testing, and marking of cables and cable fittings in ANSI/UL 2225-2013, *Cables and Cable-Fittings for Use in Hazardous (Classified) Locations*.

(7) In industrial establishments with restricted public access, where the conditions of maintenance and supervision ensure that only qualified persons service the installation, listed Type P cable with metal braid armor, with an overall jacket, terminated with fittings listed for the location, and installed in accordance with 337.10.

Informational Note No. 1: For information on construction, testing, and marking of Type P cable, see ANSI/UL ~~1309-2017~~ 1309A , ~~Marine Shipboard~~ *Cable for use in Mobile Installations* .

Informational Note No. 2: For information on construction, testing, and marking of cable fittings, see ANSI/UL 2225-2013, *Cables and Cable-Fittings for Use in Hazardous (Classified) Locations*.

Statement of Problem and Substantiation for Public Input

The requirements for Type P cables are now contained in UL 1309A, Cable for use in Mobile Installations. The following informational notes in the code that reference UL1309 have been updated to the correct UL1309A standard containing these requirements.

Related Public Inputs for This Document

Related Input	Relationship
Public Input No. 2545-NFPA 70-2020 [Section No. 501.10(A)(2)]	Companion
Public Input No. 2546-NFPA 70-2020 [Section No. 501.10(B)(1)]	Companion
Public Input No. 2547-NFPA 70-2020 [Section No. 502.10(A)(2)]	Companion
Public Input No. 2548-NFPA 70-2020 [Section No. 502.10(A)(2)]	Companion
Public Input No. 2549-NFPA 70-2020 [Section No. 502.10(B)(1)]	Companion
Public Input No. 2550-NFPA 70-2020 [Section No. 505.15(B)(1)]	Companion
Public Input No. 2551-NFPA 70-2020 [Section No. 505.15(B)(2)]	Companion
Public Input No. 2552-NFPA 70-2020 [Section No. 505.15(C)(1)]	Companion
Public Input No. 2545-NFPA 70-2020 [Section No. 501.10(A)(2)]	
Public Input No. 2546-NFPA 70-2020 [Section No. 501.10(B)(1)]	
Public Input No. 2547-NFPA 70-2020 [Section No. 502.10(A)(2)]	
Public Input No. 2548-NFPA 70-2020 [Section No. 502.10(A)(2)]	
Public Input No. 2549-NFPA 70-2020 [Section No. 502.10(B)(1)]	
Public Input No. 2550-NFPA 70-2020 [Section No. 505.15(B)(1)]	
Public Input No. 2551-NFPA 70-2020 [Section No. 505.15(B)(2)]	
Public Input No. 2552-NFPA 70-2020 [Section No. 505.15(C)(1)]	

Submitter Information Verification

Submitter Full Name: Paul Knapp
Organization: UL LLC
Street Address:
City:
State:
Zip:
Submittal Date: Mon Aug 24 13:58:19 EDT 2020
Committee: NEC-P14

Committee Statement

Resolution: FR-8467-NFPA 70-2021

Statement: The exception to (1) has been converted into a separate list item. Requirements for cable tray applications have been added to list items (3), (6) and (7). The informational notes to list items (6) and (7) are reworded to meet the requirements of NEC® Style Manual 3.1.3.1. This is simply an editorial change and not intended to change the intent of the informational note. The reference to 337.10 in (7) has been corrected to Part II of Article 337 for technical accuracy.

Public Input No. 2643-NFPA 70-2020 [Section No. 501.10(A)(1)]

(1) General.

In Class I, Division 1 locations, the following wiring methods shall be permitted:

(1) Threaded rigid metal conduit (Type RMC) or threaded steel intermediate metal conduit (Type IMC),or reinforced thermosetting resin conduit(RTRC),factory elbows and associated fittings, all marked with the suffix (XW) and listed for the location .

Exception: Type PVC conduit, Type RTRC conduit, and Type HDPE conduit shall be permitted where encased in a concrete envelope a minimum of 50 mm (2 in.) thick and provided with not less than 600 mm (24 in.) of cover measured from the top of the conduit to grade. The concrete encasement shall be permitted to be omitted where subject to the provisions of 514.8, Exception No. 2, or 515.8(A). Threaded rigid metal conduit or threaded steel intermediate metal conduit shall be used for the last 600 mm (24 in.) of the underground run to emergence or to the point of connection to the aboveground raceway of Type PVC conduit or Type HDPE conduit . An equipment grounding conductor shall be included to provide for electrical continuity of the raceway system and for grounding of non–current-carrying metal parts.

(2) Type MI cable terminated with fittings listed for the location. Type MI cable shall be installed and supported in a manner to avoid tensile stress at the termination fittings.

(3) In industrial establishments with restricted public access, where the conditions of maintenance and supervision ensure that only qualified persons service the installation, Type MC-HL cable listed for use in Class I, Zone 1 or Division 1 locations, with a gas/vaportight continuous corrugated metallic sheath, an overall jacket of suitable polymeric material, and a separate equipment grounding conductor(s) in accordance with 250.122, and terminated with fittings listed for the application. Type MC-HL cable shall be installed in accordance with the provisions of Article 330, Part II.

(4) In industrial establishments with restricted public access, where the conditions of maintenance and supervision ensure that only qualified persons service the installation, Type ITC-HL cable listed for use in Class I, Division 1 or Zone 1 locations, with a gas/vaportight continuous corrugated metallic sheath and an overall jacket of suitable polymeric material, and terminated with fittings listed for the application, and installed in accordance with 727.4.

(5) Optical fiber cable Types OFNP, OFCP, OFNR, OFCR, OFNG, OFCG, OFN, and OFC shall be permitted to be installed in raceways in accordance with 501.10(A). These optical fiber cables shall be sealed in accordance with 501.15.

(6) In industrial establishments with restricted public access, where the conditions of maintenance and supervision ensure that only qualified persons service the installation, for applications limited to 600 volts nominal or less, and where the cable is not subject to physical damage, and terminated with fittings listed for the location, Type TC-ER-HL cable. Type TC-ER-HL cable shall be listed for use in Class I, Division 1 or Zone 1 locations and shall be installed in accordance with 336.10.

Informational Note: See the information on construction, testing, and marking of cables and cable fittings in ANSI/UL 2225-2013, *Cables and Cable-Fittings for Use in Hazardous (Classified) Locations*.

(7) In industrial establishments with restricted public access, where the conditions of maintenance and supervision ensure that only qualified persons service the installation, listed Type P cable with metal braid armor, with an overall jacket, terminated with fittings listed for the location, and installed in accordance with 337.10.

Informational Note No. 1: For information on construction, testing, and marking of Type P cable, see ANSI/UL 1309-2017, *Marine Shipboard Cable*.

Informational Note No. 2: For information on construction, testing, and marking of cable fittings, see ANSI/UL 2225-2013, *Cables and Cable-Fittings for Use in Hazardous (Classified) Locations*.

Statement of Problem and Substantiation for Public Input

Type RTRC-XW conduit has proven to be effective when used in Division 2 locations. It is anticipated that the conduit and fittings will be listed as explosionproof. UL 1203 covers non-metal explosionproof electrical enclosures.

Submitter Information Verification

Submitter Full Name: Tom Guida
Organization: Tjg Services Inc
Affiliation: Champion Fiberglass Inc.
Street Address:
City:
State:
Zip:
Submittal Date: Wed Aug 26 14:01:33 EDT 2020
Committee: NEC-P14

Committee Statement

Resolution: The statement that RTRC-XW “has proven effective in Division 2 locations” is deemed insufficient (in itself) as justification for addition in Division 1. Additional testing results and specific performance requirements/limitations based on the requirements for nonmetallic explosionproof electrical enclosures in UL 1203 are needed. In addition, information on the availability of sealing fittings listed for use with RTRC-XW is also necessary for CMP-14 to consider adding this wiring method to 501.10 (A). If a transition to a metal seal fitting is required, a corresponding requirement to bond the metal portion of the system would need to be added in the relevant sections of the Code.

Public Input No. 698-NFPA 70-2020 [Section No. 501.10(A)(1)]

(1)_ General.

In Class I, Division 1 locations, the following wiring methods shall be permitted:

(1) Threaded rigid metal conduit (Type RMC) or threaded steel intermediate metal conduit (Type IMC).

Exception: Type PVC conduit, Type RTRC conduit, and Type HDPE conduit shall be permitted where encased in a concrete envelope a minimum of 50 mm (2 in.) thick and provided with not less than 600 mm (24 in.) of cover measured from the top of the conduit to grade. The concrete encasement shall be permitted to be omitted where subject to the provisions of 514.8, Exception No. 2, or 515.8(A). Threaded rigid metal conduit or threaded steel intermediate metal conduit shall be used for the last 600 mm (24 in.) of the underground run to emergence or to the point of connection to the aboveground raceway. An equipment grounding conductor shall be included to provide for electrical continuity of the raceway system and for grounding of non–current-carrying metal parts.

(2) Type MI cable terminated with fittings listed for the location. Type MI cable shall be installed and supported in a manner to avoid tensile stress at the termination fittings.

(3) In industrial establishments with restricted public access, where the conditions of maintenance and supervision ensure that only qualified persons service the installation, Type MC-HL cable listed for use in Class I, Zone 1 or Division 1 locations, with a gas/vaportight continuous corrugated metallic sheath, an overall jacket of suitable polymeric material, and a separate equipment grounding conductor(s) in accordance with 250.122, and terminated with fittings listed for the application. ~~Type~~ When installed in ladder, ventilated, trough or ventilated channel cable tray, cable shall be installed in accodance with 392. 22. Type MC-HL cable shall be installed in accordance with the provisions of Article 330, Part II.

(4) In industrial establishments with restricted public access, where the conditions of maintenance and supervision ensure that only qualified persons service the installation, Type ITC-HL cable listed for use in Class I, Division 1 or Zone 1 locations, with a gas/vaportight continuous corrugated metallic sheath and an overall jacket of suitable polymeric material, and terminated with fittings listed for the application, and installed in accordance with 727.4.

(5) Optical fiber cable Types OFNP, OFCP, OFNR, OFCR, OFNG, OFCG, OFN, and OFC shall be permitted to be installed in raceways in accordance with 501.10(A). These optical fiber cables shall be sealed in accordance with 501.15.

(6) In industrial establishments with restricted public access, where the conditions of maintenance and supervision ensure that only qualified persons service the installation, for applications limited to 600 volts nominal or less, and where the cable is not subject to physical damage, and terminated with fittings listed for the location, ~~Type TC-ER-HL cable.~~ . When installed in ladder, ventilated, trough or ventilated channel cable tray, cable shall be installed in accodance with 392. 22. Type TC-ER-HL cable shall be listed for use in Class I, Division 1 or Zone 1 locations and shall be installed in accordance with 336.10.

Informational Note: See the information on construction, testing, and marking of cables and cable fittings in ANSI/UL 2225-2013, *Cables and Cable-Fittings for Use in Hazardous (Classified) Locations*.

(7) In industrial establishments with restricted public access, where the conditions of maintenance and supervision ensure that only qualified persons service the installation, listed Type P cable with metal braid armor, with an overall jacket, terminated with fittings listed for the location, and installed in accordance with 337.10. When installed in ladder, ventilated, trough or ventilated channel cable tray, cable shall be installed in accodance with 392. 22.

Informational Note No. 1: For information on construction, testing, and marking of Type P cable, see ANSI/UL 1309-2017, *Marine Shipboard Cable*.

Informational Note No. 2: For information on construction, testing, and marking of cable fittings, see ANSI/UL 2225-2013, *Cables and Cable-Fittings for Use in Hazardous (Classified) Locations*.

Statement of Problem and Substantiation for Public Input

Installation of Cables in different types of Cables Tray, is not covered in Article 336.10 or 337.10. When installed in Cable Tray the method for installation shall be done in accordance to 392.22.

Submitter Information Verification

Submitter Full Name: David Hittinger
Organization: IEC
Street Address:
City:
State:
Zip:
Submittal Date: Thu Mar 19 11:57:29 EDT 2020
Committee: NEC-P14

Committee Statement

Resolution: FR-8467-NFPA 70-2021

Statement: The exception to (1) has been converted into a separate list item. Requirements for cable tray applications have been added to list items (3), (6) and (7). The informational notes to list items (6) and (7) are reworded to meet the requirements of NEC® Style Manual 3.1.3.1. This is simply an editorial change and not intended to change the intent of the informational note. The reference to 337.10 in (7) has been corrected to Part II of Article 337 for technical accuracy.

Public Input No. 2496-NFPA 70-2020 [Section No. 501.10(A)(2)]

(2) Flexible Connections.

Where necessary to employ flexible connections, as at motor terminals, one of the following shall be permitted:

(1) Flexible fittings listed for the location.

(2) Flexible cord in accordance with the provisions of 501.140, terminated with cord connectors listed for the location.

(3) In industrial establishments ~~with restricted public access, where the conditions of maintenance and supervision ensure that only qualified persons service the installation,~~ for applications limited to 600 volts nominal or less, and where the cable is not subject to physical damage, and terminated with fittings listed for the location. Type TC-ER-HL cable shall be listed for use in Class I, Division 1 or Zone 1 locations and shall be installed in accordance with 336.10.

Informational Note: See the information on construction, testing, and marking of cables and cable fittings in ANSI/UL 2225-2013, *Cables and Cable-Fittings for Use in Hazardous (Classified) Locations*.

(4) In industrial establishments ~~with restricted public access, where the conditions of maintenance and supervision ensure that only qualified persons service the installation,~~ listed Type P cable with metal braid armor, with an overall jacket, terminated with fittings listed for the location, and installed in accordance with 337.10.

Informational Note No. 1: For information on construction, testing, and marking of Type P cable, see ANSI/UL 1309-2017, *Marine Shipboard Cable*.

Informational Note No. 2: For information on construction, testing, and marking of cable fittings, see ANSI/UL 2225-2013, *Cables and Cable-Fittings for Use in Hazardous (Classified) Locations*.

Statement of Problem and Substantiation for Public Input

The term industrial establishment is used throughout Articles 500 through 506. Where the term is used the following text is added: "restricted access where the conditions of maintenance and engineering supervision ensure that only qualified persons install and service the installation. By creating a definition, the added text can be removed from each location where the term appears. This will remove clutter from the section or subdivision where the term appears which will improve readability.

The proposed definition adds the requirement for the AHJ to approve the building for industrial use. This will help to add some consistency to the use of the less restrictive requirements for industrial establishments.

Related Public Inputs for This Document

Related Input	Relationship
Public Input No. 2494-NFPA 70-2020 [New Definition after Definition: Inherently Safe Optical Ra...]	

Submitter Information Verification

Submitter Full Name: John Simmons
Organization: Florida East Coast JATC
Street Address:
City:
State:
Zip:
Submittal Date: Sun Aug 23 15:58:04 EDT 2020
Committee: NEC-P14

Committee Statement

Resolution: The recommendation is predicated on the inclusion of a new definition of Industrial Establishments in Article 100. This requires action by CMP-1 during the First Draft phase of the revision process. If accepted, comments will be submitted for action during the Second Draft phase of the revision process.

Public Input No. 2545-NFPA 70-2020 [Section No. 501.10(A)(2)]

(2) Flexible Connections.

Where necessary to employ flexible connections, as at motor terminals, one of the following shall be permitted:

(1) Flexible fittings listed for the location.

(2) Flexible cord in accordance with the provisions of 501.140, terminated with cord connectors listed for the location.

(3) In industrial establishments with restricted public access, where the conditions of maintenance and supervision ensure that only qualified persons service the installation, for applications limited to 600 volts nominal or less, and where the cable is not subject to physical damage, and terminated with fittings listed for the location. Type TC-ER-HL cable shall be listed for use in Class I, Division 1 or Zone 1 locations and shall be installed in accordance with 336.10.

Informational Note: See the information on construction, testing, and marking of cables and cable fittings in ANSI/UL 2225-2013, *Cables and Cable-Fittings for Use in Hazardous (Classified) Locations*.

(4) In industrial establishments with restricted public access, where the conditions of maintenance and supervision ensure that only qualified persons service the installation, listed Type P cable with metal braid armor, with an overall jacket, terminated with fittings listed for the location, and installed in accordance with 337.10.

Informational Note No. 1: For information on construction, testing, and marking of Type P cable, see ANSI/UL ~~1309-2017~~ 1309A , ~~Marine Shipboard~~ *Cable* *for use in Mobile Installations* .

Informational Note No. 2: For information on construction, testing, and marking of cable fittings, see ANSI/UL 2225-2013, *Cables and Cable-Fittings for Use in Hazardous (Classified) Locations*.

Statement of Problem and Substantiation for Public Input

The requirements for Type P cables are now contained in UL 1309A, Cable for use in Mobile Installations. The following informational notes in the code that reference UL1309 have been updated to the correct UL1309A standard containing these requirements.

Related Public Inputs for This Document

Related Input	Relationship
Public Input No. 2544-NFPA 70-2020 [Section No. 501.10(A)(1)]	Companion
Public Input No. 2546-NFPA 70-2020 [Section No. 501.10(B)(1)]	Companion
Public Input No. 2547-NFPA 70-2020 [Section No. 502.10(A)(2)]	Companion
Public Input No. 2548-NFPA 70-2020 [Section No. 502.10(A)(2)]	Companion
Public Input No. 2549-NFPA 70-2020 [Section No. 502.10(B)(1)]	Companion
Public Input No. 2550-NFPA 70-2020 [Section No. 505.15(B)(1)]	Companion
Public Input No. 2551-NFPA 70-2020 [Section No. 505.15(B)(2)]	Companion
Public Input No. 2552-NFPA 70-2020 [Section No. 505.15(C)(1)]	Companion
Public Input No. 2544-NFPA 70-2020 [Section No. 501.10(A)(1)]	

Public Input No. 2546-NFPA 70-2020 [Section No. 501.10(B)(1)]
Public Input No. 2547-NFPA 70-2020 [Section No. 502.10(A)(2)]
Public Input No. 2548-NFPA 70-2020 [Section No. 502.10(A)(2)]
Public Input No. 2549-NFPA 70-2020 [Section No. 502.10(B)(1)]
Public Input No. 2550-NFPA 70-2020 [Section No. 505.15(B)(1)]
Public Input No. 2551-NFPA 70-2020 [Section No. 505.15(B)(2)]
Public Input No. 2552-NFPA 70-2020 [Section No. 505.15(C)(1)]

Submitter Information Verification

Submitter Full Name: Paul Knapp
Organization: UL LLC
Street Address:
City:
State:
Zip:
Submittal Date: Mon Aug 24 14:00:55 EDT 2020
Committee: NEC-P14

Committee Statement

Resolution: FR-8454-NFPA 70-2021

Statement: The title of the standard referenced in Informational Note 1 to list item (4) has been updated. Informational Notes to list items 3 and 4 are reworded to meet the requirements of NEC® Style Manual 3.1.3.1. This is simply an editorial change and not intended to change the intent of the informational note.

Public Input No. 1808-NFPA 70-2020 [Section No. 501.10(A)(3)]

(3) Boxes and Fittings.

All boxes and fittings shall be ~~approved~~ identified for Class I, Division 1.

Informational Note: For entry into enclosures required to be explosionproof, see the information on construction, testing, and marking of cables, explosionproof cable fittings, and explosionproof cord connectors in ANSI/~~UL 2225~~ L 2225 -2013, *Cables and Cable-Fittings for Use in Hazardous (Classified) Locations*.

Statement of Problem and Substantiation for Public Input

The term identified is used throughout Articles 500 - 516 when requiring a Class and/or Division designation for equipment. For example 502.10(A)(30 requires boxes and fittings in a Class II Division 1 location to be identified for Class II locations. The definitions of approved and identified are very different. Changing the term in this subdivision adds consistency to the NEC and eliminates confusion.

Submitter Information Verification

Submitter Full Name: John Simmons
Organization: Florida East Coast JATC
Street Address:
City:
State:
Zip:
Submittal Date: Tue Jul 07 21:22:54 EDT 2020
Committee: NEC-P14

Committee Statement

Resolution: FR-8452-NFPA 70-2021

Statement: The term “identified” is a more accurate and consistent term than “approved”. Informational Note No. 1 is reworded to meet the requirements of NEC Style Manual 3.1.3.1. This is simply an editorial change and not intended to change the intent of the informational note.

Public Input No. 1296-NFPA 70-2020 [Section No. 501.10(B)]

(B) Class I, Division 2.

(1) General.

In Class I, Division 2 locations, all wiring methods permitted in 501.10(A) and the following wiring methods shall be permitted:

(1) Rigid metal conduit (Type RMC) ~~and intermediate~~ intermediate metal conduit (Type IMC) ~~with listed threaded or threadless fittings~~ PVC Coated RMC, and PVC Coated IMC with listed fittings .

(2) Enclosed gasketed busways and enclosed gasketed wireways.

(3) Types PLTC and PLTC-ER cable in accordance with Part II or III of Article 725, including installation in cable tray systems. The cable shall be terminated with listed fittings. Type PLTC-ER cable shall include an equipment grounding conductor in addition to a drain wire that might be present.

(4) Types ITC and ITC-ER cable as permitted in 727.4 and terminated with listed fittings. Type ITC-ER cable shall include an equipment grounding conductor in addition to a drain wire.

(5) Type MC, MV, TC, or TC-ER cable, including installation in cable tray systems. Type TC-ER cable shall include an equipment grounding conductor in addition to a drain wire that might be present. All cable types shall be terminated with listed fittings.

(6) ~~Where metal conduit~~ In industrial establishments with restricted public acess, where the conditions of maintenance and supervision endures that only qualified persons service the installation and where wiring methods in 501.10(B)(1)(1) will not provide sufficient corrosion resistance, any of the following shall be permitted: ~~In industrial establishments with restricted public access, where the conditions of maintenance and supervision ensure that only qualified persons service the installation,~~

(7) Listed reinforced thermosetting resin conduit (RTRC), factory elbows, and associated fittings, all marked with the suffix -XW

(8) ~~PVC-coated rigid metal conduit (RMC), factory elbows, and associated fittings~~

(9) ~~PVC-coated intermediate metal conduit (IMC), factory elbows, and associated fittings~~

a. Schedule 80 PVC conduit, factory elbows, and associated fittings .

(10) Optical fiber cable Types OFNP, OFCP, OFNR, OFCR, OFNG, OFCG, OFN, and OFC shall be permitted to be installed in cable trays or any other raceway in accordance with 501.10(B). Optical fiber cables shall be sealed in accordance with 501.15.

(11) Cablebus.

(12) In industrial establishments with restricted public access, where the conditions of maintenance and supervision ensure that only qualified persons service the installation, listed Type P cable with or without metal braid armor, with an overall jacket, terminated with fittings listed for the location, and installed in accordance with 337.10.

Informational Note No. 1: For information on construction, testing, and marking of Type P cable, see ANSI/UL 1309-2017, *Marine Shipboard Cable*.

Informational Note No. 2: For information on construction, testing, and marking of cable fittings, see ANSI/UL 2225-2013, *Cables and Cable-Fittings for Use in Hazardous (Classified) Locations*.

Where seals are required for boundary conditions as defined in 501.15(A)(4), the Division 1 wiring method shall extend into the Division 2 area to the seal, which shall be located on the Division 2 side of the Division 1–Division 2 boundary.

(2) Flexible Connections.

Where provision must be made for flexibility, one or more of the following shall be permitted:

(1) Listed flexible metal fittings.

(2) Flexible metal conduit with listed fittings.

(3) Interlocked armor Type MC cable with listed fittings.

(4) Liquidtight flexible metal conduit with listed fittings.

(5) Liquidtight flexible nonmetallic conduit with listed fittings.

(6) Flexible cord listed for extra-hard usage and terminated with listed fittings. A conductor for use as an equipment grounding conductor shall be included in the flexible cord.

(7) For elevator use, an identified elevator cable of Type EO, ETP, or ETT, shown under the "use" column in Table 400.4 for "hazardous (classified) locations" and terminated with listed fittings.

Informational Note: See 501.30(B) for grounding requirements where flexible conduit is used.

(3) Nonincendive Field Wiring.

Nonincendive field wiring shall be permitted using any of the wiring methods permitted for unclassified locations. Nonincendive field wiring systems shall be installed in accordance with the control drawing(s). Simple apparatus, not shown on the control drawing, shall be permitted in a nonincendive field wiring circuit, provided the simple apparatus does not interconnect the nonincendive field wiring circuit to any other circuit.

Informational Note: Simple apparatus is defined in Article 100 Part III.

Separate nonincendive field wiring circuits shall be installed in accordance with one of the following:

(1) In separate cables

(2) In multiconductor cables where the conductors of each circuit are within a grounded metal shield

(3) In multiconductor cables or in raceways, where the conductors of each circuit have insulation with a minimum thickness of 0.25 mm (0.01 in.)

(4) Boxes and Fittings.

Boxes and fittings shall not be required to be explosionproof except as required by 501.105(B)(2), 501.115(B)(1), and 501.150(B)(1).

Informational Note: For entry into enclosures required to be explosionproof, see the information on construction, testing, and marking of cables, explosionproof cable fittings, and explosionproof cord connectors in ANSI/UL 2225-2013, *Cables and Cable-Fittings for Use in Hazardous (Classified) Locations*.

Statement of Problem and Substantiation for Public Input

Revise 501.10(B)(1) to clarify that in Class I, Division 2 Locations metal conduit includes PVC coated conduit and return the language regarding industrial establishments as previously described in 2017 NEC where RTRC can only be used in industrial establishments with given criteria. No substantiation was provided to remove this language in 2020 NEC.

Fittings can only be threaded or threadless – so the words are not needed. The product labeling on the PVC coated conduit will guide the user for use with threaded fittings only. Keeping these words in the NEC while adding in the PVC Coated style RMC creates a conflict.

Submitter Information Verification

Submitter Full Name: Megan Hayes
Organization: Nema
Street Address:
City:
State:
Zip:
Submittal Date: Thu May 28 12:07:51 EDT 2020
Committee: NEC-P14

Committee Statement

Resolution: FR-8464-NFPA 70-2021

Statement: PVC coated RMC and IMC added to list item (1) as an acceptable subset of RMC and IMC that does not require the corrosion resistance pre-qualifier. The “industrial establishments” limitation for RTRC-XW (which was removed in the 2020 NEC) was adequately substantiated in the 2020 First Draft for requiring that limitation be added. The last sentence of 501.10(B)(1) covering boundary seals is deleted here and relocated to 501.15(A)(4). See the first revision to 501.15(A)(4).

Informational Note No 1 to list item (9) is revised to point to the new UL 1309A standard. In addition, Informational Notes to list item (9) are reworded to meet the requirements of NEC® Style Manual 3.1.3.1. This is simply an editorial change and not intended to change the intent of the informational note.

Public Input No. 1975-NFPA 70-2020 [Section No. 501.10(B)]

(B) Class I, Division 2.

(1) General.

In Class I, Division 2 locations, all wiring methods permitted in 501.10(A) and the following wiring methods shall be permitted:

(1) Rigid metal conduit (Type RMC) and intermediate metal conduit (Type IMC) with listed threaded or threadless fittings.

(2) Enclosed gasketed busways and enclosed gasketed wireways.

(3) Types PLTC and PLTC-ER cable in accordance with Part II or III of Article 725, including installation in cable tray systems. The cable shall be terminated with listed fittings. Type PLTC-ER cable shall include an equipment grounding conductor in addition to a drain wire that might be present.

(4) Types ITC and ITC-ER cable as permitted in 727.4 and terminated with listed fittings. Type ITC-ER cable shall include an equipment grounding conductor in addition to a drain wire.

(5) Type MC, MV, TC, or TC-ER cable, including installation in cable tray systems. Type TC-ER cable shall include an equipment grounding conductor in addition to a drain wire that might be present. All cable types shall be terminated with listed fittings.

(6) Where metal conduit will not provide sufficient corrosion resistance, any of the following shall be permitted:

(7) Listed reinforced thermosetting resin conduit (RTRC), factory elbows, and associated fittings, all marked with the suffix -XW

(8) PVC-coated rigid metal conduit (RMC), factory elbows, and associated fittings

(9) PVC-coated intermediate metal conduit (IMC), factory elbows, and associated fittings

(10) In industrial establishments with restricted public access, where the conditions of maintenance and supervision ensure that only qualified persons service the installation, Schedule 80 PVC conduit, factory elbows, and associated fittings

(11) Optical fiber cable Types OFNP, OFCP, OFNR, OFCR, OFNG, OFCG, OFN, and OFC shall be permitted to be installed in cable trays or any other raceway in accordance with 501.10(B). Optical fiber cables shall be sealed in accordance with 501.15.

(12) Cablebus.

(13) In industrial establishments with restricted public access, where the conditions of maintenance and supervision ensure that only qualified persons service the installation, listed Type P cable with or without metal braid armor, with an overall jacket, terminated ~~with~~ with listed fittings ~~listed for the location~~ , and installed in accordance with 337.10.

Informational Note ~~No. 1~~ : For information on construction, testing, and marking of Type P cable, see ANSI/UL 1309-2017, *Marine Shipboard Cable*~~.~~

~~Informational Note No. 2: For information on construction, testing, and marking of cable fittings, see ANSI/UL 2225-2013, *Cables and Cable-Fittings for Use in Hazardous (Classified) Locations* .~~

Where seals are required for boundary conditions as defined in 501.15(A)(4) , the Division 1 wiring method shall extend into the Division 2 area to the seal, which shall be located on the Division 2 side of the Division 1–Division 2 boundary.

(2) Flexible Connections.

Where provision must be made for flexibility, one or more of the following shall be permitted:

(1) Listed flexible metal fittings.

(2) Flexible metal conduit with listed fittings.

(3) Interlocked armor Type MC cable with listed fittings.

(4) Liquidtight flexible metal conduit with listed fittings.

(5) Liquidtight flexible nonmetallic conduit with listed fittings.

(6) Flexible cord listed for extra-hard usage and terminated with listed fittings. A conductor for use as an equipment grounding conductor shall be included in the flexible cord.

(7) For elevator use, an identified elevator cable of Type EO, ETP, or ETT, shown under the "use" column in Table 400.4 for "hazardous (classified) locations" and terminated with listed fittings.

Informational Note: See 501.30(B) for grounding requirements where flexible conduit is used.

(3) Nonincendive Field Wiring.

Nonincendive field wiring shall be permitted using any of the wiring methods permitted for unclassified locations. Nonincendive field wiring systems shall be installed in accordance with the control drawing(s). Simple apparatus, not shown on the control drawing, shall be permitted in a nonincendive field wiring circuit, provided the simple apparatus does not interconnect the nonincendive field wiring circuit to any other circuit.

Informational Note: Simple apparatus is defined in Article 100 Part III.

Separate nonincendive field wiring circuits shall be installed in accordance with one of the following:

(1) In separate cables

(2) In multiconductor cables where the conductors of each circuit are within a grounded metal shield

(3) In multiconductor cables or in raceways, where the conductors of each circuit have insulation with a minimum thickness of 0.25 mm (0.01 in.)

(4) Boxes and Fittings.

Boxes and fittings shall not be required to be explosionproof except as required by 501.105(B)(2), 501.115(B)(1), and 501.150(B)(1).

Informational Note: For entry into enclosures required to be explosionproof, see the information on construction, testing, and marking of cables, explosionproof cable fittings, and explosionproof cord connectors in ANSI/UL 2225-2013, *Cables and Cable-Fittings for Use in Hazardous (Classified) Locations*.

Statement of Problem and Substantiation for Public Input

There are no listing requirements specific to Class I, Division 2 Type P cable fittings. These fittings are evaluated to the ordinary location requirements for tray cable fittings.

Submitter Information Verification

Submitter Full Name: Megan Hayes
Organization: Nema
Street Address:
City:

State:

Zip:

Submittal Date: Wed Jul 22 14:54:03 EDT 2020

Committee: NEC-P14

Committee Statement

Resolution: CMP-14's action on PI 2239 clarifies when "listed for the location" is to be applied. The informational note provides guidance for certain applications and needs to be retained.

Public Input No. 178-NFPA 70-2019 [Section No. 501.10(B)(1)]

(1) General.

In Class I, Division 2 locations, all wiring methods permitted in 501.10(A) and the following wiring methods shall be permitted:

(1) Rigid metal conduit (Type RMC) and intermediate metal conduit (Type IMC) with listed threaded or threadless fittings.

(2) Enclosed gasketed busways and enclosed gasketed wireways.

(3) Types PLTC and PLTC-ER cable in accordance with Part II or III of Article 725, including installation in cable tray systems. The cable shall be terminated with listed fittings. Type PLTC-ER cable shall include an equipment grounding conductor in addition to a drain wire that might be present.

(4) Types ITC and ITC-ER cable as permitted in 727.4 and terminated with listed fittings. Type ITC-ER cable shall include an equipment grounding conductor in addition to a drain wire.

(5) Type MC, MV, TC, or TC-ER cable, including installation in cable tray systems. Type TC-ER cable shall include an equipment grounding conductor in addition to a drain wire that might be present. All cable types shall be terminated with listed fittings.

(6) Where metal conduit will not provide sufficient corrosion resistance, any of the following shall be permitted:

~~Listed~~

a. In industrial establishments with restricted public access, where the conditions of maintenance and supervision ensure that only qualified persons service the installation, reinforced thermosetting resin conduit (RTRC), factory elbows, and associated fittings, all marked with the suffix -XW

b. PVC-coated rigid metal conduit (RMC), factory elbows, and associated fittings

c. PVC-coated intermediate metal conduit (IMC), factory elbows, and associated fittings

d. In industrial establishments with restricted public access, where the conditions of maintenance and supervision ensure that only qualified persons service the installation, Schedule 80 PVC conduit, factory elbows, and associated fittings

(7) Optical fiber cable Types OFNP, OFCP, OFNR, OFCR, OFNG, OFCG, OFN, and OFC shall be permitted to be installed in cable trays or any other raceway in accordance with 501.10(B). Optical fiber cables shall be sealed in accordance with 501.15.

(8) Cablebus.

(9) In industrial establishments with restricted public access, where the conditions of maintenance and supervision ensure that only qualified persons service the installation, listed Type P cable with or without metal braid armor, with an overall jacket, terminated with fittings listed for the location, and installed in accordance with 337.10.

Informational Note No. 1: For information on construction, testing, and marking of Type P cable, see ANSI/UL 1309-2017, *Marine Shipboard Cable*.

Informational Note No. 2: For information on construction, testing, and marking of cable fittings, see ANSI/UL 2225-2013, *Cables and Cable-Fittings for Use in Hazardous (Classified) Locations*.

Where seals are required for boundary conditions as defined in 501.15(A)(4), the Division 1 wiring method shall extend into the Division 2 area to the seal, which shall be located on the Division 2 side of the Division 1–Division 2 boundary.

Statement of Problem and Substantiation for Public Input

This Public Input only pertains to 501.10(B)(1)(6)a. Terra automatically underline the whole section.

"Listed" was deleted since 355.6 requires all RTRC and fittings to be listed. The requirements for "industrial establishments" was added.

The 2014 NEC allowed RTRC-XW to be used only when installed in industrial establishments where supervised and maintenance was present. The 2017 removed this restriction without technical substantiation. This Public Input revises the section to reinstate the requirement.

Submitter Information Verification

Submitter Full Name: David Kendall
Organization: ABB, Inc.
Street Address:
City:
State:
Zip:
Submittal Date: Tue Dec 10 09:26:00 EST 2019
Committee: NEC-P14

Committee Statement

Resolution: The substantiation does not technically support restoring the restriction that the to use in “industrial establishments” only. The removal of this restriction was discussed at length by CMP-14 during the 2017 NEC revision cycle.

Public Input No. 2239-NFPA 70-2020 [Section No. 501.10(B)(1)]

(1) General.

In Class I, Division 2 locations, all wiring methods permitted in 501.10(A) and the following wiring methods shall be permitted:

(1) Rigid metal conduit (Type RMC) and intermediate metal conduit (Type IMC) with listed threaded or threadless fittings.

(2) Enclosed gasketed busways and enclosed gasketed wireways.

(3) Types PLTC and PLTC-ER cable in accordance with Part II or III of Article 725, including installation in cable tray systems. The cable shall be terminated with listed fittings. Type PLTC-ER cable shall include an equipment grounding conductor in addition to a drain wire that might be present.

(4) Types ITC and ITC-ER cable as permitted in 727.4 and terminated with listed fittings. Type ITC-ER cable shall include an equipment grounding conductor in addition to a drain wire.

(5) Type MC, MV, TC, or TC-ER cable, including installation in cable tray systems. Type TC-ER cable shall include an equipment grounding conductor in addition to a drain wire that might be present. All cable types shall be terminated with listed fittings.

(6) Where metal conduit will not provide sufficient corrosion resistance, any of the following shall be permitted:

(7) Listed reinforced thermosetting resin conduit (RTRC), factory elbows, and associated fittings, all marked with the suffix -XW

(8) PVC-coated rigid metal conduit (RMC), factory elbows, and associated fittings

(9) PVC-coated intermediate metal conduit (IMC), factory elbows, and associated fittings

(10) In industrial establishments with restricted public access, where the conditions of maintenance and supervision ensure that only qualified persons service the installation, Schedule 80 PVC conduit, factory elbows, and associated fittings

(11) Optical fiber cable Types OFNP, OFCP, OFNR, OFCR, OFNG, OFCG, OFN, and OFC shall be permitted to be installed in cable trays or any other raceway in accordance with 501.10(B). Optical fiber cables shall be sealed in accordance with 501.15.

(12) Cablebus.

(13) In industrial establishments with restricted public access, where the conditions of maintenance and supervision ensure that only qualified persons service the installation, listed Type P cable with or without metal braid armor, with an overall jacket, terminated with fittings listed for the location~~, and installed~~ when entering explosionproof, flameproof or pressurized equipment. The cable shall be installed in accordance with 337.10.

Informational Note No. 1: For information on construction, testing, and marking of Type P cable, see ~~ANSI/~~ UL ~~1309-2017~~ 1309A , ~~Marine Shipboard~~ Cable for use in Mobile Installations .

Informational Note No. 2: For information on construction, testing, and marking of cable fittings, see ANSI/UL 2225-2013, *Cables and Cable-Fittings for Use in Hazardous (Classified) Locations*.

Where seals are required for boundary conditions as defined in 501.15(A)(4), the Division 1 wiring method shall extend into the Division 2 area to the seal, which shall be located on the Division 2 side of the Division 1–Division 2 boundary.

Statement of Problem and Substantiation for Public Input

Cable termination fittings do not need to be listed for the location where general purpose electrical enclosures are permitted in Class I, Division 2 locations.
The requirements for Type P cables are now contained in UL 1309A, Cable for use in Mobile Installations.

Submitter Information Verification

Submitter Full Name: Donald Ankele
Organization: UL LLC
Street Address:
City:
State:
Zip:
Submittal Date: Wed Aug 12 11:14:52 EDT 2020
Committee: NEC-P14

Committee Statement

Resolution: FR-8464-NFPA 70-2021

Statement: PVC coated RMC and IMC added to list item (1) as an acceptable subset of RMC and IMC that does not require the corrosion resistance pre-qualifier. The “industrial establishments” limitation for RTRC-XW (which was removed in the 2020 NEC) was adequately substantiated in the 2020 First Draft for requiring that limitation be added. The last sentence of 501.10(B)(1) covering boundary seals is deleted here and relocated to 501.15(A)(4). See the first revision to 501.15(A)(4).

Informational Note No 1 to list item (9) is revised to point to the new UL 1309A standard. In addition, Informational Notes to list item (9) are reworded to meet the requirements of NEC® Style Manual 3.1.3.1. This is simply an editorial change and not intended to change the intent of the informational note.

Public Input No. 2497-NFPA 70-2020 [Section No. 501.10(B)(1)]

(1) General.

In Class I, Division 2 locations, all wiring methods permitted in 501.10(A) and the following wiring methods shall be permitted:

(1) Rigid metal conduit (Type RMC) and intermediate metal conduit (Type IMC) with listed threaded or threadless fittings.

(2) Enclosed gasketed busways and enclosed gasketed wireways.

(3) Types PLTC and PLTC-ER cable in accordance with Part II or III of Article 725, including installation in cable tray systems. The cable shall be terminated with listed fittings. Type PLTC-ER cable shall include an equipment grounding conductor in addition to a drain wire that might be present.

(4) Types ITC and ITC-ER cable as permitted in 727.4 and terminated with listed fittings. Type ITC-ER cable shall include an equipment grounding conductor in addition to a drain wire.

(5) Type MC, MV, TC, or TC-ER cable, including installation in cable tray systems. Type TC-ER cable shall include an equipment grounding conductor in addition to a drain wire that might be present. All cable types shall be terminated with listed fittings.

(6) Where metal conduit will not provide sufficient corrosion resistance, any of the following shall be permitted:

(7) Listed reinforced thermosetting resin conduit (RTRC), factory elbows, and associated fittings, all marked with the suffix -XW

(8) PVC-coated rigid metal conduit (RMC), factory elbows, and associated fittings

(9) PVC-coated intermediate metal conduit (IMC), factory elbows, and associated fittings

(10) In industrial establishments

~~with restricted public access, where the conditions of maintenance and supervision ensure that only qualified persons service the installation,~~

a. Schedule 80 PVC conduit, factory elbows, and associated fittings

(11) Optical fiber cable Types OFNP, OFCP, OFNR, OFCR, OFNG, OFCG, OFN, and OFC shall be permitted to be installed in cable trays or any other raceway in accordance with 501.10(B). Optical fiber cables shall be sealed in accordance with 501.15.

(12) Cablebus.

(13) In industrial establishments ~~with restricted public access, where the conditions of maintenance and supervision ensure that only qualified persons service the installation,~~ listed Type P cable with or without metal braid armor, with an overall jacket, terminated with fittings listed for the location, and installed in accordance with 337.10.

Informational Note No. 1: For information on construction, testing, and marking of Type P cable, see ANSI/UL 1309-2017, *Marine Shipboard Cable*.

Informational Note No. 2: For information on construction, testing, and marking of cable fittings, see ANSI/UL 2225-2013, *Cables and Cable-Fittings for Use in Hazardous (Classified) Locations*.

Where seals are required for boundary conditions as defined in 501.15(A)(4), the Division 1 wiring method shall extend into the Division 2 area to the seal, which shall be located on the Division 2 side of the Division 1–Division 2 boundary.

Statement of Problem and Substantiation for Public Input

The term industrial establishment is used throughout Articles 500 through 506. Where the term is used the following text is added: "restricted access where the conditions of maintenance and engineering supervision ensure that only qualified persons install and service the installation. By creating a definition, the added text can be removed from each location where the term appears. This will remove clutter from the section or subdivision where the term appears which will improve readability.

The proposed definition adds the requirement for the AHJ to approve the building for industrial use. This will help to add some consistency to the use of the less restrictive requirements for industrial establishments.

Related Public Inputs for This Document

Related Input	Relationship
Public Input No. 2494-NFPA 70-2020 [New Definition after Definition: Inherently Safe Optical Ra...]	

Submitter Information Verification

Submitter Full Name: John Simmons
Organization: Florida East Coast JATC
Street Address:
City:
State:
Zip:
Submittal Date: Sun Aug 23 16:01:22 EDT 2020
Committee: NEC-P14

Committee Statement

Resolution: The recommendation is predicated on the inclusion of a new definition of Industrial Establishments in Article 100. This requires action by CMP-1 during the First Draft phase of the revision process. If accepted, comments will be submitted for action during the Second Draft phase of the revision process.

Public Input No. 2546-NFPA 70-2020 [Section No. 501.10(B)(1)]

(1) General.

In Class I, Division 2 locations, all wiring methods permitted in 501.10(A) and the following wiring methods shall be permitted:

(1) Rigid metal conduit (Type RMC) and intermediate metal conduit (Type IMC) with listed threaded or threadless fittings.

(2) Enclosed gasketed busways and enclosed gasketed wireways.

(3) Types PLTC and PLTC-ER cable in accordance with Part II or III of Article 725, including installation in cable tray systems. The cable shall be terminated with listed fittings. Type PLTC-ER cable shall include an equipment grounding conductor in addition to a drain wire that might be present.

(4) Types ITC and ITC-ER cable as permitted in 727.4 and terminated with listed fittings. Type ITC-ER cable shall include an equipment grounding conductor in addition to a drain wire.

(5) Type MC, MV, TC, or TC-ER cable, including installation in cable tray systems. Type TC-ER cable shall include an equipment grounding conductor in addition to a drain wire that might be present. All cable types shall be terminated with listed fittings.

(6) Where metal conduit will not provide sufficient corrosion resistance, any of the following shall be permitted:

(7) Listed reinforced thermosetting resin conduit (RTRC), factory elbows, and associated fittings, all marked with the suffix -XW

(8) PVC-coated rigid metal conduit (RMC), factory elbows, and associated fittings

(9) PVC-coated intermediate metal conduit (IMC), factory elbows, and associated fittings

(10) In industrial establishments with restricted public access, where the conditions of maintenance and supervision ensure that only qualified persons service the installation, Schedule 80 PVC conduit, factory elbows, and associated fittings

(11) Optical fiber cable Types OFNP, OFCP, OFNR, OFCR, OFNG, OFCG, OFN, and OFC shall be permitted to be installed in cable trays or any other raceway in accordance with 501.10(B). Optical fiber cables shall be sealed in accordance with 501.15.

(12) Cablebus.

(13) In industrial establishments with restricted public access, where the conditions of maintenance and supervision ensure that only qualified persons service the installation, listed Type P cable with or without metal braid armor, with an overall jacket, terminated with fittings listed for the location, and installed in accordance with 337.10.

Informational Note No. 1: For information on construction, testing, and marking of Type P cable, see ANSI/UL ~~1309-2017~~ 1309A , ~~Marine Shipboard~~ *Cable for use in Mobile Installations* .

Informational Note No. 2: For information on construction, testing, and marking of cable fittings, see ANSI/UL 2225-2013, *Cables and Cable-Fittings for Use in Hazardous (Classified) Locations*.

Where seals are required for boundary conditions as defined in 501.15(A)(4), the Division 1 wiring method shall extend into the Division 2 area to the seal, which shall be located on the Division 2 side of the Division 1–Division 2 boundary.

Statement of Problem and Substantiation for Public Input

The requirements for Type P cables are now contained in UL 1309A, Cable for use in Mobile Installations. The following informational notes in the code that reference UL1309 have been updated to the correct UL1309A standard containing these requirements.

Related Public Inputs for This Document

Related Input	Relationship
Public Input No. 2544-NFPA 70-2020 [Section No. 501.10(A)(1)]	companion
Public Input No. 2545-NFPA 70-2020 [Section No. 501.10(A)(2)]	companion
Public Input No. 2547-NFPA 70-2020 [Section No. 502.10(A)(2)]	companion
Public Input No. 2548-NFPA 70-2020 [Section No. 502.10(A)(2)]	companion
Public Input No. 2549-NFPA 70-2020 [Section No. 502.10(B)(1)]	companion
Public Input No. 2550-NFPA 70-2020 [Section No. 505.15(B)(1)]	companion
Public Input No. 2551-NFPA 70-2020 [Section No. 505.15(B)(2)]	companion
Public Input No. 2552-NFPA 70-2020 [Section No. 505.15(C)(1)]	companion
Public Input No. 2544-NFPA 70-2020 [Section No. 501.10(A)(1)]	
Public Input No. 2545-NFPA 70-2020 [Section No. 501.10(A)(2)]	
Public Input No. 2547-NFPA 70-2020 [Section No. 502.10(A)(2)]	
Public Input No. 2548-NFPA 70-2020 [Section No. 502.10(A)(2)]	
Public Input No. 2549-NFPA 70-2020 [Section No. 502.10(B)(1)]	
Public Input No. 2550-NFPA 70-2020 [Section No. 505.15(B)(1)]	
Public Input No. 2551-NFPA 70-2020 [Section No. 505.15(B)(2)]	
Public Input No. 2552-NFPA 70-2020 [Section No. 505.15(C)(1)]	

Submitter Information Verification

Submitter Full Name: Paul Knapp
Organization: UL LLC
Street Address:
City:
State:
Zip:
Submittal Date: Mon Aug 24 14:02:57 EDT 2020
Committee: NEC-P14

Committee Statement

Resolution: FR-8464-NFPA 70-2021

Statement: PVC coated RMC and IMC added to list item (1) as an acceptable subset of RMC and IMC that does not require the corrosion resistance pre-qualifier. The “industrial establishments” limitation for RTRC-XW (which was removed in the 2020 NEC) was adequately substantiated in the 2020 First Draft for requiring that limitation be added. The last sentence of 501.10(B)(1) covering boundary seals is deleted here and relocated to 501.15(A)(4). See the first revision to 501.15(A)(4).

Informational Note No 1 to list item (9) is revised to point to the new UL 1309A standard. In addition, Informational Notes to list item (9) are reworded to meet the requirements of NEC® Style Manual 3.1.3.1. This is simply an editorial change and not intended to

change the intent of the informational note.

Public Input No. 4180-NFPA 70-2020 [Section No. 501.10(B)(1)]

(1) General.

In Class I, Division 2 locations, all wiring methods permitted in 501.10(A) and the following wiring methods shall be permitted:

(1) Rigid metal conduit (Type RMC) and intermediate metal conduit (Type IMC) with listed threaded or threadless fittings.

(2) Enclosed gasketed busways and enclosed gasketed wireways.

(3) Types PLTC and PLTC-ER cable in accordance with Part II or III of Article 725, including installation in cable tray systems. The cable shall be terminated with listed fittings. Type PLTC-ER cable shall include an equipment grounding conductor in addition to a drain wire that might be present, if required by 250 .112(I).

(4) Types ITC and ITC-ER cable as permitted in 727.4 and terminated with listed fittings. Type ITC-ER cable shall include an equipment grounding conductor in addition to a drain wire, if required by 250 .112(I).

(5) Type MC, MV, TC, or TC-ER cable, including installation in cable tray systems. Type TC-ER cable shall include an equipment grounding conductor in addition to a drain wire that might be present. All cable types shall be terminated with listed fittings.

(6) Where metal conduit will not provide sufficient corrosion resistance, any of the following shall be permitted:

(7) Listed reinforced thermosetting resin conduit (RTRC), factory elbows, and associated fittings, all marked with the suffix -XW

(8) PVC-coated rigid metal conduit (RMC), factory elbows, and associated fittings

(9) PVC-coated intermediate metal conduit (IMC), factory elbows, and associated fittings

(10) In industrial establishments with restricted public access, where the conditions of maintenance and supervision ensure that only qualified persons service the installation, Schedule 80 PVC conduit, factory elbows, and associated fittings

(11) Optical fiber cable Types OFNP, OFCP, OFNR, OFCR, OFNG, OFCG, OFN, and OFC shall be permitted to be installed in cable trays or any other raceway in accordance with 501.10(B). Optical fiber cables shall be sealed in accordance with 501.15.

(12) Cablebus.

(13) In industrial establishments with restricted public access, where the conditions of maintenance and supervision ensure that only qualified persons service the installation, listed Type P cable with or without metal braid armor, with an overall jacket, terminated with fittings listed for the location, and installed in accordance with 337.10.

Informational Note No. 1: For information on construction, testing, and marking of Type P cable, see ANSI/UL 1309-2017, *Marine Shipboard Cable*.

Informational Note No. 2: For information on construction, testing, and marking of cable fittings, see ANSI/UL 2225-2013, *Cables and Cable-Fittings for Use in Hazardous (Classified) Locations*.

Where seals are required for boundary conditions as defined in 501.15(A)(4), the Division 1 wiring method shall extend into the Division 2 area to the seal, which shall be located on the Division 2 side of the Division 1–Division 2 boundary.

Statement of Problem and Substantiation for Public Input

Instrumentation cables are unlikely to require an equipment grounding conductor, and it is pointless to require the inclusion of a wire that will be connected to nothing. The technically correct phrasing is to condition the cable make up rule on whether or not 250.112(I) will require such a conductor based on whether system grounding will apply to the control circuit.

Submitter Information Verification

Submitter Full Name: Frederic Hartwell
Organization: Hartwell Electrical Services, Inc.
Affiliation: self
Street Address:
City:
State:
Zip:
Submittal Date: Thu Sep 10 00:09:53 EDT 2020
Committee: NEC-P14

Committee Statement

Resolution: CMP-14 affirms that an equipment grounding conductor in addition to the drain wire is required and should not be limited by 250.112(I).

Public Input No. 1368-NFPA 70-2020 [Section No. 501.10(B)(2)]

(2) Flexible Connections.

Where provision must be made for flexibility, one or more of the following shall be permitted:

(1) Listed flexible metal fittings.

(2) Flexible metal conduit with listed fittings.

(3) Interlocked armor Type MC cable with listed fittings.

(4) Liquidtight flexible metal conduit with listed fittings.

(5) Liquidtight flexible nonmetallic conduit with listed fittings.

(6) Flexible cord listed for extra-hard usage and terminated with listed fittings. A conductor for use as an equipment grounding conductor shall be included in the flexible cord.

(7) For elevator use, an identified elevator cable of Type EO, ETP, or ETT, shown under the "use" column in Table 400.4 for "hazardous (classified) locations" and terminated with listed fittings.

Informational Note: See 501.30(B) for the requirement of an equipment grounding conductor requirements where flexible conduit is used.

Statement of Problem and Substantiation for Public Input

Text revised to make it clear that we the rule is about the requirement of the equipment grounding conductor, not 'grounding.'

Submitter Information Verification

Submitter Full Name: Mike Holt
Organization: Mike Holt Enterprises Inc
Street Address:
City:
State:
Zip:
Submittal Date: Mon Jun 01 19:56:17 EDT 2020
Committee: NEC-P14

Committee Statement

Resolution: The proposed revision would add the words equipment grounding conductor to the informational note. Subdivision 501.30(B) provides requirements for bonding and not grounding. The first revision for PI 1984 converts the informational note to positive code language and deletes the note.

Public Input No. 1984-NFPA 70-2020 [Section No. 501.10(B)(2)]

(2) Flexible Connections.

Where provision must be made for flexibility, one or more of the following shall be permitted:

(1) Listed flexible metal fittings.

(2) Flexible metal conduit with listed fittings and bonded per 501 .30(B).

(3) Interlocked armor Type MC cable with listed fittings.

(4) Liquidtight flexible metal conduit with listed fittings and bonded per 501 .30(B).

(5) Liquidtight flexible nonmetallic conduit with listed fittings.

(6) Flexible cord listed for extra-hard usage and terminated with listed fittings. A conductor for use as an equipment grounding conductor shall be included in the flexible cord.

(7) For elevator use, an identified elevator cable of Type EO, ETP, or ETT, shown under the "use" column in Table 400.4 for "hazardous (classified) locations" and terminated with listed fittings.

~~Informational Note: See 501.30(B) for grounding requirements where flexible conduit is used.~~

Statement of Problem and Substantiation for Public Input

The informational note refers the reader to 501.30(B) for grounding for flexible metal conduit is used. The note is under list item 7 elevator cable. Informational notes are required to be placed directly under the rule they apply to. Additionally, 501.30(B) provides bonding requirements for liquidtight flexible metal conduit and not grounding requirements. Moving the note to list item 4 puts the reference to the bonding requirement where it belongs (LFMC) and turns the note into code text.

Related Public Inputs for This Document

Related Input	Relationship
Public Input No. 1982-NFPA 70-2020 [Section No. 503.10(A)(3)]	
Public Input No. 1983-NFPA 70-2020 [Section No. 502.10(A)(2)]	
Public Input No. 1982-NFPA 70-2020 [Section No. 503.10(A)(3)]	
Public Input No. 1983-NFPA 70-2020 [Section No. 502.10(A)(2)]	

Submitter Information Verification

Submitter Full Name: John Simmons
Organization: Florida East Coast JATC
Street Address:
City:
State:
Zip:
Submittal Date: Wed Jul 22 18:22:45 EDT 2020
Committee: NEC-P14

Committee Statement

Resolution: FR-8500-NFPA 70-2021

Statement: The informational note has been deleted and the concepts from it have been integrated into (2) and (4). Type P cable has been added as an acceptable wiring method for flexible connections.

Public Input No. 3743-NFPA 70-2020 [Section No. 501.10(B)(2)]

(2) Flexible Connections.

Where provision must be made for flexibility, one or more of the following shall be permitted:

(1) Listed flexible metal fittings.

(2) Flexible metal conduit with listed fittings.

(3) Interlocked armor Type MC cable with listed fittings.

(4) Liquidtight flexible metal conduit with listed fittings.

(5) Liquidtight flexible nonmetallic conduit with listed fittings.

(6) Flexible cord listed for extra-hard usage and terminated with listed fittings. A conductor for use as an equipment grounding conductor shall be included in the flexible cord.

(7) For elevator use, an identified elevator cable of Type EO, ETP, or ETT, shown under the "use" column in Table 400.4 for "hazardous (classified) locations" and terminated with listed fittings.

Informational Note: See 501.30(B) for grounding requirements where flexible conduit is used.

(8) In industrial establishments with restricted public access, where the conditions of maintenance and supervision ensure that only qualified persons service the installation, listed Type P cable with or without metal braid armor, with an overall jacket, terminated with listed fittings, and installed in accordance with 337.10.

Statement of Problem and Substantiation for Public Input

Type P Cable should be permitted for installation in a Class I, Division 2 location where flexibility is necessary. The fittings are only required to be listed, not listed for the location.

Submitter Information Verification

Submitter Full Name: Megan Hayes
Organization: Nema
Street Address:
City:
State:
Zip:
Submittal Date: Wed Sep 09 11:37:56 EDT 2020
Committee: NEC-P14

Committee Statement

Resolution: FR-8500-NFPA 70-2021

Statement: The informational note has been deleted and the concepts from it have been integrated into (2) and (4). Type P cable has been added as an acceptable wiring method for flexible connections.

Public Input No. 1986-NFPA 70-2020 [Section No. 501.10(B)(4)]

(4) Boxes and Fittings.

Boxes and fittings shall not be required to be explosionproof except as required by 501.105(B)(2), 501.115(B)(1), and 501.150(B)(1).

Informational Note 1 : For entry into enclosures required to be explosionproof, see the information on construction, testing, and marking of cables, explosionproof cable fittings, and explosionproof cord connectors in ANSI/UL 2225-2013, *Cables and Cable-Fittings for Use in Hazardous (Classified) Locations*.

Informational Note 2: For entry into enclosures required to be explosionproof, see the information on construction, testing, and marking of explosionproof conduit fittings in ANSI/UL 1203-2015, Explosion-Proof and Dust-Ignition-Proof Electrical Equipment for Use in Hazardous (Classified) Locations.

Statement of Problem and Substantiation for Public Input

Section 501.10(B)(4) is relevant to Section 501.10(B)(1) which permits conduit.

Submitter Information Verification

Submitter Full Name: Megan Hayes
Organization: Nema
Street Address:
City:
State:
Zip:
Submittal Date: Thu Jul 23 09:17:52 EDT 2020
Committee: NEC-P14

Committee Statement

Resolution: FR-8491-NFPA 70-2021

Statement: Informational Note No. 1 is reworded to meet the requirements of NEC® Style Manual 3.1.3.1. This is simply an editorial change and not intended to change the intent of the informational note. A new information note was added to provide a reference to ANSI/UL 1203-2013.

Public Input No. 2079-NFPA 70-2020 [New Section after 501.15(A)]

TITLE OF NEW CONTENT

501.15(A)(5) Underground Raceways

Statement of Problem and Substantiation for Public Input

Currently there exists requirements for underground wiring and raceways in several sections (ex. Aircraft hangars, fuel dispensing facilities, bulk storage). However there is no general section in 501 and the requirements listed in the sections mentioned above seem inconsistent.

Also guidance is required for sealing of conduits that start in a classified area, go underground and re-emerge in the same classified area.

Recommendation to add wording that provides guidance that conduit seals are not required for conduit installed under the following conditions:
--The conduit goes underground and re-emerges from ground in the same classification. For example, it originates in a Class I, Div 1 area, goes underground and re-emerges in the same Class I, Div 1 area. The conduit does not go under any other classified or unclassified areas.

--The equipment where the conduit will installed will be listed and marked for the hazardous location

--RMC or IMC is used for the entire length of the conduit installation except as exempted by other other sections (Fuel dispensing locations for example)

-- threaded connections are utilized for all connections.

Justification: Additional guidance for underground wiring within a classification is needed.

Submitter Information Verification

Submitter Full Name: Henry Matthews
Organization: Marathon Petroleum Company
Street Address:
City:
State:
Zip:
Submittal Date: Wed Jul 29 08:38:23 EDT 2020
Committee: NEC-P14

Committee Statement

Resolution: This submitter does not provide the desired code requirements in the form of code text; it only makes a recommendation. Requirements for underground raceways are found throughout the NEC and do not need to be duplicated in Article 501 especially in 501.15 which provides the requirements for conduit seals for Class I locations. Sealing requirements for conduits leaving a classified location into an unclassified location are currently found in 501.15. The other concerns address in the PI are covered in various Aarticles of the NEC.

Public Input No. 2648-NFPA 70-2020 [Section No. 501.15(A)(1)]

(1) Entering Enclosures.

Each conduit entry into an explosionproof enclosure shall have a conduit seal where either of the following conditions apply:

(1) The enclosure contains apparatus, such as switches, circuit breakers, fuses, relays, or resistors that may produce arcs, sparks, or temperatures that exceed 80 percent of the autoignition temperature, in degrees Celsius, of the gas or vapor involved in normal operation.

Exception: Seals shall not be required for conduit entering an enclosure under any one of the following conditions:

(1) The switch, circuit breaker, fuse, relay, or resistor is enclosed within a chamber hermetically sealed against the entrance of gases or vapors.

(2) The switch, circuit breaker, fuse, relay, or resistor is immersed in oil in accordance with 501.115(B)(1)(2).

(3) The switch, circuit breaker, fuse, relay, or resistor is enclosed within an enclosure, identified for the location, and marked "Leads Factory Sealed," or "Factory Sealed," "Seal not Required," or equivalent.

(4) The switch, circuit breaker, fuse, relay, or resistor is part of a nonincendive circuit.

(2) The entry is metric designator 53 (trade size 2) or larger, and the enclosure contains terminals, splices, or taps.

An enclosure, identified for the location, and marked "Leads Factory Sealed", or "Factory Sealed," or "Seal not Required," or equivalent shall not be considered to serve as a seal for another adjacent enclosure that is required to have a conduit seal.

Conduit seals shall be installed within 450 mm (18 in.) from the enclosure or as required by the enclosure marking. Only ~~threaded couplings, or~~ explosionproof fittings such as unions, reducers, elbows, and capped elbows that are not larger than the trade size of the conduit, shall be permitted between the sealing fitting and the explosionproof enclosure.

Statement of Problem and Substantiation for Public Input

Any fitting between the enclosure that is required to be explosion proof and the sealing fitting must be able to contain the products of combustion from an internal explosion without the ignition of the surrounding flammable atmosphere. There is nothing in the records that a standard conduit coupling has ever been evaluated for that purpose. UL 6 does not require such an evaluation and the straight threads required by that standard are unlikely to be able to contain the explosion as required for explosion proof fittings and enclosures in UL 1203.
It makes no sense to require that the enclosure and the sealing fitting be evaluated to the requirements of UL 1203 and then permit a non-explosion proof coupling between the explosion proof enclosure and the sealing fitting. Any fitting used between those two items must be evaluated to the requirements in Section 21 of UL 1203. A standard conduit coupling has not been so evaluated. This is a serious safety that needs to be addressed by the code.

Submitter Information Verification

Submitter Full Name: Don Ganiere

Organization: [Not Specified]

Street Address:
City:
State:
Zip:
Submittal Date: Wed Aug 26 19:28:00 EDT 2020
Committee: NEC-P14

Committee Statement

Resolution: Conduit couplings in addition to conduit Listed to UL 6 have been permitted by the NEC® in this configuration for decades without incident. The submitter has not provided substantiation of a safety risk associated with the use of conduit couplings.

Public Input No. 4338-NFPA 70-2020 [Section No. 501.15(A)(4)]

(4) Class I, Division 1 Boundary.

A conduit seal shall be required in each conduit run leaving a Division 1 location. The sealing fitting shall be ~~permitted to be~~ installed ~~on either side of the boundary~~ within 3.05 m (10 ft) of the boundary ~~, and it shall~~ and located on the Division 2 side. The seal shall be designed and installed to minimize the amount of gas or vapor within the portion of the conduit installed in the Division 1 location that can be communicated beyond the seal. The conduit run between the conduit seal and the point at which the conduit leaves the Division 1 location shall contain no union, coupling, box, or other fitting except for a listed explosionproof reducer installed at the conduit seal.

Exception No. 1: Metal conduit that contains no unions, couplings, boxes, or fittings, that passes completely through a Division 1 location with no fittings installed within 300 mm (12 in.) of either side of the boundary, shall not require a conduit seal if the termination points of the unbroken conduit are located in unclassified locations.

Exception No. 2: For underground conduit installed in accordance with 300.5 where the boundary is below grade, the sealing fitting shall be permitted to be installed after the conduit emerges from below grade, but there shall be no union, coupling, box, or fitting, other than listed explosionproof reducers at the sealing fitting, in the conduit between the sealing fitting and the point at which the conduit emerges from below grade.

Statement of Problem and Substantiation for Public Input

The last paragraph of Section 501.10(B)(1) addresses wiring methods to be used at the boundary between Division 1 and 2 areas. This paragraph specifies the boundary seal to be located on the Division 2 side of the boundary. Section 501.15(A)(4) states the boundary seal is permitted to be installed on either side of the boundary. This PI seeks to the language in Section 501.15(A)(4) to reflect the requirement as stated in 501.10(B)(1). This will make the language consistent and provide clarity to the Code user.

Submitter Information Verification

Submitter Full Name: Jebediah Novak
Organization: Cedar Rapids Electrical JATC
Affiliation: IBEW Local #405
Street Address:
City:
State:
Zip:
Submittal Date: Thu Sep 10 10:38:49 EDT 2020
Committee: NEC-P14

Committee Statement

Resolution: FR-8675-NFPA 70-2021
Statement: The requirement that formerly resided in 501.10(B)(1) has been moved to 501.15(A)(4) as it is addressing sealing requirements and is more appropriately located in this section.

Public Input No. 1610-NFPA 70-2020 [Section No. 501.15(B)]

(B) Conduit Seals, Class I, Division 2.

In Class I, Division 2 locations, conduit seals shall be located in accordance with 501.15(B)(1) and (B)(2).

(1) Entering Enclosures.

For connections to enclosures that are required to be explosionproof, a conduit seal shall be provided in accordance with 501.15(A)(1)(1) and (A)(3). All portions of the conduit run or nipple between the conduit seal and enclosure shall comply with 501.10(A).

(2) Class I, Division 2 Boundary.

A conduit seal shall be required in each conduit run leaving a Class I, Division 2 location. The conduit sealing ~~fitting shall~~ fitting shall be permitted to be installed on either side of the boundary within 3.05 m (10 ft) of the boundary and it shall be designed and installed to minimize the amount of gas or vapor within the portion of the conduit installed in the Division 2 location that can be communicated beyond the seal. Rigid metal conduit or threaded steel intermediate metal conduit shall be used between the conduit sealing fitting and the point at which the conduit leaves the Division 2 location, and a threaded connection shall be used at the conduit sealing fitting. The conduit run between the conduit seal and the point at which the conduit leaves the Division 2 location shall contain no union, coupling, box, or other fitting except for a listed explosionproof reducer installed at the conduit seal. ~~Such~~ Conduit seals shall not be required to be explosionproof but shall be identified for the purpose of minimizing the passage of gases permitted under normal operating conditions and shall be accessible.

Informational Note: For further information, refer to ANSI/UL 514B-2012, *Conduit, Tubing, and Cable Fittings*.

Exception No. 1: Metal conduit that contains no unions, couplings, boxes, or fittings, that passes completely through a Division 2 location with no fittings installed within 300 mm (12 in.) of either side of the boundary, shall not be ~~required to be sealed~~ require a conduit seal if the termination points of the unbroken conduit are located in unclassified locations.

Exception No. 2: Conduit systems terminating in an unclassified location where the metal conduit transitions to cable tray, cablebus, ventilated busway, or Type MI cable, or to cable not installed in any cable tray or raceway system, shall not ~~be required to be sealed~~ require a conduit seal where passing from the Division 2 location into the unclassified location under the following conditions:

(1) The unclassified location is outdoors, or the unclassified location is indoors and the conduit system is entirely in one room.

(2) The conduits shall not terminate at an enclosure containing an ignition source in normal operation.

Exception No. 3: Conduit systems passing from an enclosure or a room that is unclassified, as a result of pressurization, into a Division 2 location shall not require a conduit seal at the boundary.

Informational Note: For further information, refer to NFPA 496-2017, *Standard for Purged and Pressurized Enclosures for Electrical Equipment*.

Exception No. 4: Segments of aboveground conduit systems shall not ~~be required to be sealed where~~ require a conduit seal where passing from a Division 2 location into an unclassified location if all of the following conditions are met:

(1) No part of the conduit system segment passes through a Division 1 location where the conduit segment contains unions, couplings, boxes, or fittings that are located within 300 mm (12 in.) of the Division 1 location.

(2) The conduit system segment is located entirely in outdoor locations.

(3) The conduit system segment is not directly connected to canned pumps, process or service connections for flow, pressure, or analysis measurement, and so forth, that depend on a single compression seal, diaphragm, or tube to prevent flammable or combustible fluids from entering the conduit system.

(4) The conduit system segment contains only threaded metal conduit, unions, couplings, conduit bodies, and fittings in the unclassified location.

(5) The conduit system segment is sealed at its entry to each enclosure or fitting located in the Division 2 location that contains terminals, splices, or taps.

Statement of Problem and Substantiation for Public Input

Adding “conduit” before “seal” ensures that the reader understands there is only one appropriate type

of “seal.”

Submitter Information Verification

Submitter Full Name: Mike Holt
Organization: Mike Holt Enterprises Inc
Street Address:
City:
State:
Zip:
Submittal Date: Wed Jun 24 12:18:17 EDT 2020
Committee: NEC-P14

Committee Statement

Resolution: FR-8680-NFPA 70-2021

Statement: Type RTRC conduit was included by reference to 501.10(B)(1)(1). The requirement for the conduit to be Listed for the location was not included, as Type RTRC conduit is not Listed this way. Reference was made to 501.10(B)(1)(6) as well to include Schedule 80 PVC conduit.

The words ‘system’ and ‘segment’ were removed from 501.15(B)(2) Exceptions 2 through 4 for clarity and to preclude the need to introduce a new term requiring a definition.

The wording in 501.15(B)(2) Exceptions 1, 2 and 4 was clarified to indicate where seals are not required.

Exception No. 3 is revised to align with the requirements of NFPA 496. The edition date of NFPA 496 is updated.

Public Input No. 2738-NFPA 70-2020 [Section No. 501.15(B)(2)]

(2) Class I, Division 2 Boundary.

A conduit seal shall be required in each conduit run leaving a Class I, Division 2 location. The sealing fitting shall be permitted to be installed on either side of the boundary within 3.05 m (10 ft) of the boundary and it shall be designed and installed to minimize the amount of gas or vapor within the portion of the conduit installed in the Division 2 location that can be communicated beyond the seal. Rigid metal conduit or threaded steel intermediate metal conduit) ,or reinforced thermosetting resin conduit(RTRC),factory elbows and associated fittings, all marked with the suffix (XW) and listed for the location . shall be used between the sealing fitting and the point at which the conduit leaves the Division 2 location, and a threaded connection shall be used at the sealing fitting. The conduit run between the conduit seal and the point at which the conduit leaves the Division 2 location shall contain no union, coupling, box, or other fitting except for a listed explosionproof reducer installed at the conduit seal. Such seals shall not be required to be explosionproof but shall be identified for the purpose of minimizing the passage of gases permitted under normal operating conditions and shall be accessible.

Informational Note: For further information, refer to ANSI/UL 514B-2012, *Conduit, Tubing, and Cable Fittings*.

Exception No. 1: Metal conduit that contains no unions, couplings, boxes, or fittings, that passes completely through a Division 2 location with no fittings installed within 300 mm (12 in.) of either side of the boundary, shall not be required to be sealed if the termination points of the unbroken conduit are located in unclassified locations.

Exception No. 2: Conduit systems terminating in an unclassified location where the metal conduit transitions to cable tray, cablebus, ventilated busway, or Type MI cable, or to cable not installed in any cable tray or raceway system, shall not be required to be sealed where passing from the Division 2 location into the unclassified location under the following conditions:

(1) The unclassified location is outdoors, or the unclassified location is indoors and the conduit system is entirely in one room.

(2) The conduits shall not terminate at an enclosure containing an ignition source in normal operation.

Exception No. 3: Conduit systems passing from an enclosure or a room that is unclassified, as a result of pressurization, into a Division 2 location shall not require a seal at the boundary.

Informational Note: For further information, refer to NFPA 496-2017, *Standard for Purged and Pressurized Enclosures for Electrical Equipment*.

Exception No. 4: Segments of aboveground conduit systems shall not be required to be sealed where passing from a Division 2 location into an unclassified location if all of the following conditions are met:

(1) No part of the conduit system segment passes through a Division 1 location where the conduit segment contains unions, couplings, boxes, or fittings that are located within 300 mm (12 in.) of the Division 1 location.

(2) The conduit system segment is located entirely in outdoor locations.

(3) The conduit system segment is not directly connected to canned pumps, process or service connections for flow, pressure, or analysis measurement, and so forth, that depend on a single compression seal, diaphragm, or tube to prevent flammable or combustible fluids from entering the conduit system.

(4) The conduit system segment contains only threaded metal conduit, unions, couplings, conduit bodies, and fittings in the unclassified location.

(5) The conduit system segment is sealed at its entry to each enclosure or fitting located in the Division 2 location that contains terminals, splices, or taps.

Statement of Problem and Substantiation for Public Input

Type RTRC-XW conduit has proven to be effective when used in Division 2 locations. It is anticipated that the conduit will be listed as explosionproof. UL 1203 covers non-metal explosionproof electrical enclosures. There is no need to transform to metal conduit at the boundary See Public Input No. 2643-NFPA 70-2020 [Section No. 501.10(A)(1)]

Submitter Information Verification

Submitter Full Name: Tom Guida
Organization: Tjg Services Inc
Affiliation: Champion Fiberglass Inc.
Street Address:
City:
State:
Zip:
Submittal Date: Sun Aug 30 10:12:24 EDT 2020
Committee: NEC-P14

Committee Statement

Resolution: FR-8680-NFPA 70-2021

Statement: Type RTRC conduit was included by reference to 501.10(B)(1)(1). The requirement for the conduit to be Listed for the location was not included, as Type RTRC conduit is not Listed this way. Reference was made to 501.10(B)(1)(6) as well to include Schedule 80 PVC conduit.

The words ‘system’ and ‘segment’ were removed from 501.15(B)(2) Exceptions 2 through 4 for clarity and to preclude the need to introduce a new term requiring a definition.

The wording in 501.15(B)(2) Exceptions 1, 2 and 4 was clarified to indicate where seals are not required.

Exception No. 3 is revised to align with the requirements of NFPA 496. The edition date of NFPA 496 is updated.

Public Input No. 636-NFPA 70-2020 [Section No. 501.15(B)(2)]

(2) Class I, Division 2 Boundary.

A conduit seal shall be required in each conduit run leaving a Class I, Division 2 location. The sealing fitting shall be permitted to be installed on either side of the boundary within 3.05 m (10 ft) of the boundary and it shall be designed and installed to minimize the amount of gas or vapor within the portion of the conduit installed in the Division 2 location that can be communicated beyond the seal. Rigid metal conduit or threaded steel intermediate metal conduit shall be used between the sealing fitting and the point at which the conduit leaves the Division 2 location, and a threaded connection shall be used at the sealing fitting. The conduit run between the conduit seal and the point at which the conduit leaves the Division 2 location shall contain no union, coupling, box, or other fitting except for a listed explosionproof reducer installed at the conduit seal. Such seals shall not be required to be explosionproof but shall be identified for the purpose of minimizing the passage of gases permitted under normal operating conditions and shall be accessible.

Informational Note: For further information, refer to ANSI/UL 514B-2012, *Conduit, Tubing, and Cable Fittings*.

Exception No. 1: Metal conduit that contains no unions, couplings, boxes, or fittings, that passes completely through a Division 2 location with no fittings installed within 300 mm (12 in.) of either side of the boundary, shall not be required to be sealed if the termination points of the unbroken conduit are located in unclassified locations.

Exception No. 2: Conduit systems terminating in an unclassified location where the metal conduit transitions to cable tray, cablebus, ventilated busway, or Type MI cable, or to cable not installed in any cable tray or raceway system, shall not be required to be sealed where passing from the Division 2 location into the unclassified location under the following conditions:

(1) The unclassified location is outdoors, or the unclassified location is indoors and the conduit system is entirely in one room.

(2) The conduits shall not terminate at an enclosure containing an ignition source in normal operation.

Exception No. 3: Conduit systems passing from an enclosure or a room that is unclassified, as a result of pressurization, into a Division 2 location shall not require a seal at the boundary.

Informational Note: For further information, refer to NFPA 496-2017, *Standard for Purged and Pressurized Enclosures for Electrical Equipment*.

Exception No. 4: Segments of aboveground conduit systems shall not be required to be sealed where passing from a Division 2 location into an unclassified location if all of the following conditions are met:

Informational Note: A segment of conduit is the part of a complete aboveground conduit system between the last enclosure or fitting in a Division 2 location that contains terminals, splices, or taps, and the unclassified location.

(1) No part of the conduit system segment passes through a Division 1 location where the conduit segment contains unions, couplings, boxes, or fittings that are located within 300 mm (12 in.) of the Division 1 location.

(2) The conduit system segment is located entirely in outdoor locations.

(3) The conduit system segment is not directly connected to canned pumps, process or service connections for flow, pressure, or analysis measurement, and so forth, that depend on a single compression seal, diaphragm, or tube to prevent flammable or combustible fluids from entering the conduit system.

(4) The conduit system segment contains only threaded metal conduit, unions, couplings, conduit bodies, and fittings in the unclassified location.

(5) The conduit system segment is sealed at its entry to each enclosure or fitting located in the Division 2 location that contains terminals, splices, or taps.

Additional Proposed Changes

File Name	Description	Approved
Pages_from_NEC-ROPA-1998-Articles_318_to_511.pdf	PDF Extract of Previous CMP statement in 1998	

Statement of Problem and Substantiation for Public Input

It is unclear what creates conduit segments within a conduit system, nor do I believe this wordy exception is clear enough to allow it to be consistently deduced correctly. The 1998 ROP record 14-142 panel statement (attached) reads: "A "segment" is the part of a complete aboveground conduit system between the last enclosure in a Division 2 location and the unclassified location". The proposed IN has taken this definition and modified it to align with the existing language in (5).

Submitter Information Verification

Submitter Full Name: Matthew Norlander
Organization:
Street Address:
City:
State:
Zip:
Submittal Date: Wed Mar 11 23:12:21 EDT 2020
Committee: NEC-P14

Committee Statement

Resolution: FR-8680-NFPA 70-2021

Statement: Type RTRC conduit was included by reference to 501.10(B)(1)(1). The requirement for the conduit to be Listed for the location was not included, as Type RTRC conduit is not Listed this way. Reference was made to 501.10(B)(1)(6) as well to include Schedule 80 PVC conduit.

The words ‘system’ and ‘segment’ were removed from 501.15(B)(2) Exceptions 2 through 4 for clarity and to preclude the need to introduce a new term requiring a definition.

The wording in 501.15(B)(2) Exceptions 1, 2 and 4 was clarified to indicate where seals are not required.

Exception No. 3 is revised to align with the requirements of NFPA 496. The edition date of NFPA 496 is updated.

Note: none of the identified proposals had associated comments in the ROC

NUMBER OF PANEL MEMBERS ELIGIBLE TO VOTE 18
VOTE ON PANEL ACTION
AFFIRMATIVE 18

(Log #2189)

14- 129 - (501-5(b)(2)) Reject
SUBMITTER. Donald R. Cook, Shelby County Building Insp , AL
RECOMMENDATION Revise as follows
There shall be no union, coupling, box, or fitting, except listed explosionproof reducers at the sealing fitting, in the conduit between the sealing fitting and the point at which the conduit leaves the Division 2 location
SUBSTANTIATION Changing the code from approved to listed would place the responsibility of product evaluation in the hands of organizations properly equipped and qualified for this task These organizations posses the following qualifications, A) employ staffs of professional engineers, B) have access to the hundreds of product standards required to evaluate equipment, C) have access to millions of dollars worth of facilities and test equipment, D) have time to devote solely to product evaluation, for the purpose of evaluating factory-installed internal wiring and construction of equipment. Very few, if any, AHJ's would posses all of these qualifications With listing available, most jurisdictions do not anticipate having to evaluate equipment in the field If compliance with product standard, for equipment to be installed in HAZARDOUS LOCATIONS where equipment failure could result in fires or explosions, then it should be verified by organizations that posses all these qualifications
PANEL ACTION Reject.
PANEL STATEMENT See the panel statement in Proposal 14-20
NUMBER OF PANEL MEMBERS ELIGIBLE TO VOTE 18
VOTE ON PANEL ACTION
AFFIRMATIVE 17
NEGATIVE 1
EXPLANATION OF NEGATIVE
COOK. See my Explanation of Negative vote on Proposal 14-20

(Log #2348)

14- 130 - (501-5(b)(2)) Accept in Principle
SUBMITTER: Morton L Mullins, Chemical Manufacturers Association
RECOMMENDATION In the third line after "location" add the following
"Within 10 ft. (3 05 m) of the boundary"
SUBSTANTIATION This change was added to Division 1 sealing requirements, 501-5(a)(4), in the 1996 NEC and should be added to the Division 2 requirements This proposal will clarify that up to a standard length of conduit may be used between the boundary and the sealing fitting
PANEL ACTION Accept in Principle
Add a comma after the new word "boundary" in the Proposal to read as follows
(2) In each conduit run passing from a Class I, Division 2 location into an unclassified location The sealing fitting shall be permitted on either side of the boundary of such location within 10 ft. (3 05m) of the boundary, but shall be so designed and installed to
PANEL STATEMENT The comma was added as an editorial correction
NUMBER OF PANEL MEMBERS ELIGIBLE TO VOTE 18
VOTE ON PANEL ACTION
AFFIRMATIVE 18

(Log #2603)

14- 131 - (501-5(b)(2)) Accept in Principle
SUBMITTER. Stephen V Norako, Cooper Industries, Inc Crouse-Hinds Div
RECOMMENDATION. Insert between the words "location" and "but" in the third sentence
"within 10 ft. (3 05m) of the boundary"
SUBSTANTIATION The allowed distance between boundary and seal is not clear The 10 ft. maximum was addressed in 501-5(a)(4) for Class 1, Division 1 locations, but was never carried through to Class 1, Division 2 This change will provide uniformity in content.
PANEL ACTION Accept in Principle
PANEL STATEMENT. See the panel action in Proposal 14-130 which seems to address the submitter's concern
NUMBER OF PANEL MEMBERS ELIGIBLE TO VOTE 18
VOTE ON PANEL ACTION.
AFFIRMATIVE 18

(Log #1965)

14- 132 - (501-5(b)(2), Exception No 4) Reject
SUBMITTER. Donald A. Ganiere, Ottawa, IL
RECOMMENDATION Revise as follows
Exception No 4 ~~Segments of~~ aboveground conduit systems shall not be required to be sealed where passing from a Class I, Division 2 location into an unclassified location if the following conditions are met
a. No part of the conduit system ~~segment~~ passes through a Class I, Division 1 location where the conduit contains unions, couplings, boxes, or fittings within 12 in (305 mm) of the Class I, Division 1 location, and
b The conduit system ~~segment~~ is located entirely in outdoor locations, and
c The conduit system ~~segment~~ is not directly connected to canned pumps, process or service connections for flow, pressure, or analysis measurement, etc., that depend on a single compression seal, diaphragm, or tube to prevent flammable or combustible fluids from entering the conduit system, and
d The conduit system ~~segment~~ contains only threaded metal conduit, unions, couplings, conduit bodies, and fittings in the unclassified location, and
e The conduit system ~~segment~~ is sealed at its entry to each enclosure or fitting housing terminals, splices, or taps in Class I, Division 2 locations
SUBSTANTIATION Delete the word segment throughout this exception The use of this word makes the interpretation of this exception difficult. I believe that the intent of this exception is that it only applies if both the classified and nonclassified areas that the conduit passes through are outdoors The use of the word segment, especially in part b, leaves open the interpretation that only the classified or the nonclassified portion of the conduit system be in an outdoor location
PANEL ACTION Reject.
PANEL STATEMENT Exception No 4 applies only to that part or "segment" of a complete aboveground conduit system between the last enclosure in the Division 2 location and the unclassified location This is a segment of the complete conduit system, not the complete system as would be the case with the change proposed.
NUMBER OF PANEL MEMBERS ELIGIBLE TO VOTE 18
VOTE ON PANEL ACTION
AFFIRMATIVE 18

(Log #2190)

14- 133 - (501-5(c)(1)) Reject
SUBMITTER. Donald R. Cook, Shelby County Building Insp , AL
RECOMMENDATION Revise first sentence to read as follows
Enclosures for connections or equipment shall be provided with a listed integral means for sealing, or sealing fittings listed for Class I locations shall be used
SUBSTANTIATION Changing the code from approved to listed would place the responsibility of product evaluation in the hands of organizations properly equipped and qualified for this task These organizations posses the following qualifications, A) employ staffs of professional engineers, B) have access to the hundreds of product standards required to evaluate equipment, C) have access to millions of dollars worth of facilities and test equipment, D) have time to devote solely to product evaluation, for the purpose of evaluating factory-installed internal wiring and construction of equipment. Very few, if any, AHJ's would posses all of these qualifications With listing available, most jurisdictions do not anticipate having to evaluate equipment in the field If compliance with product standard, for equipment to be installed in HAZARDOUS LOCATIONS where equipment failure could result in fires or explosions, then it should be verified by organizations that posses all these qualifications
PANEL ACTION Reject.
PANEL STATEMENT See the panel statement in Proposal 14-20
NUMBER OF PANEL MEMBERS ELIGIBLE TO VOTE 18
VOTE ON PANEL ACTION
AFFIRMATIVE 17
NEGATIVE 1
EXPLANATION OF NEGATIVE.
COOK. See my Explanation of Negative vote on Proposal 14-20

Public Input No. 2698-NFPA 70-2020 [Section No. 501.15(D)(1)]

(1) At Terminations.

Cables shall be sealed with sealing fittings that comply with 501.15(C) at all terminations. Type MC-HL cables with a gas/vaportight continuous corrugated metallic sheath and an overall jacket of suitable polymeric material shall be sealed with a listed fitting after the jacket and any other covering have been removed so that the sealing compound can surround each individual insulated conductor in such a manner as to minimize the passage of gases and vapors.

Seals for cables entering enclosures shall be installed within 450 mm (18 in.) of the enclosure or as required by the enclosure marking. Only threaded couplings, or explosionproof fittings such as unions, reducers, elbows, and capped elbows that are not larger than the trade size of the conduit, shall be permitted between the sealing fitting and the enclosure.

Exception: Shielded cables and twisted pair cables shall not require the removal of the shielding material or separation of the twisted pairs, provided the termination is sealed ~~by an approved means~~ by a LISTED means, to minimize the entrance of gases or vapors and prevent propagation of flame into the cable core.

Statement of Problem and Substantiation for Public Input

Cable glands, for use in Class I Division 1 are subjected to a series of tests when the cable conductors are sealed with a sealing compound as described in 501.15 (C) with no other test option within the standards. Applying the 'approved means' method described in the exception, without any actual testing could compromise the integrity of the seal and potentially create a dangerous situation.

Submitter Information Verification

Submitter Full Name: James Hughes
Organization: Cmp Products Texas Inc
Affiliation: CMP Products Texas Inc
Street Address:
City:
State:
Zip:
Submittal Date: Fri Aug 28 16:18:34 EDT 2020
Committee: NEC-P14

Committee Statement

Resolution: FR-8682-NFPA 70-2021

Statement: Type TC-ER-HL and Type P cables were inadvertently omitted from this section when added as permissible wiring methods. Section 501.15(D)(1) Exception was revised to clarify that conductors shall be sealed in accordance with the instructions provided with the listed fittings required by 501.15(C).

Public Input No. 862-NFPA 70-2020 [Section No. 501.15(D)(1)]

(1) At Terminations.

Cables shall be sealed with sealing fittings that comply with 501.15(C) at all terminations. Type MC-HL cables ~~with~~ , with a gas/vaportight continuous corrugated metallic sheath and an overall jacket of suitable polymeric material, Type TC-ER-HL, and Type P cable shall be sealed with a listed fitting after the jacket and any other covering have been removed so that the sealing compound can surround each individual insulated conductor in such a manner as to minimize the passage of gases and vapors.

Seals for cables entering enclosures shall be installed within 450 mm (18 in.) of the enclosure or as required by the enclosure marking. Only threaded couplings, or explosionproof fittings such as unions, reducers, elbows, and capped elbows that are not larger than the trade size of the conduit, shall be permitted between the sealing fitting and the enclosure.

Exception: Shielded cables and twisted pair cables shall not require the removal of the shielding material or separation of the twisted pairs, provided the termination is sealed by an approved means to minimize the entrance of gases or vapors and prevent propagation of flame into the cable core.

Statement of Problem and Substantiation for Public Input

With the addition of TC-ER-HL and Type P cable have been added as approved wiring methods in 501.10 (A), CMP 14 forgot to include sealing at the terminations as MC-HL is required to be done. Lowell Reith-submitter.

Submitter Information Verification

Submitter Full Name: David Hittinger
Organization: IEC
Street Address:
City:
State:
Zip:
Submittal Date: Mon Apr 13 17:15:18 EDT 2020
Committee: NEC-P14

Committee Statement

Resolution: FR-8682-NFPA 70-2021

Statement: Type TC-ER-HL and Type P cables were inadvertently omitted from this section when added as permissible wiring methods. Section 501.15(D)(1) Exception was revised to clarify that conductors shall be sealed in accordance with the instructions provided with the listed fittings required by 501.15(C).

Public Input No. 2956-NFPA 70-2020 [Section No. 501.15(D)(2)]

(2) Cables Capable of Transmitting Gases or Vapors.

Cables with a gas/vaportight continuous sheath capable of transmitting gases or vapors through the cable core, installed in conduit, shall be sealed in the ~~Class 1~~ Class I , Division 1 location after the jacket and any other coverings have been removed so that the sealing compound can surround each individual insulated conductor or optical fiber tube and the outer jacket.

Exception: Multiconductor cables with a gas/vaportight continuous sheath capable of transmitting gases or vapors through the cable core shall be permitted to be considered as a single conductor by sealing the cable in the conduit within 450 mm (18 in.) of the enclosure and the cable end within the enclosure by an approved means to minimize the entrance of gases or vapors and prevent the propagation of flame into the cable core, or by other approved methods. It shall not be required to remove the shielding material or separate the twisted pairs of shielded cables and twisted pair cables.

Statement of Problem and Substantiation for Public Input

This text has a typo where "1" was used in place of "I" which may cause confusion. This PI provides a correction.

Submitter Information Verification

Submitter Full Name: John Cowans
Organization: Siemens
Street Address:
City:
State:
Zip:
Submittal Date: Thu Sep 03 13:50:53 EDT 2020
Committee: NEC-P14

Committee Statement

Resolution: FR-8687-NFPA 70-2021
Statement: The number format has been corrected.

Public Input No. 2702-NFPA 70-2020 [Section No. 501.15(E)(1)]

(1) Terminations.

Cables entering enclosures that are required to be explosionproof shall be sealed at the point of entrance. The sealing fitting shall comply with 501.15(B)(1) or be explosionproof. Multiconductor or optical multifiber cables with a gas/vaportight continuous sheath capable of transmitting gases or vapors through the cable core that are installed in a Division 2 location shall be sealed with a listed fitting after the jacket and any other coverings have been removed, so that the sealing compound can surround each individual insulated conductor or optical fiber tube in such a manner as to minimize the passage of gases and vapors. Multiconductor or optical multifiber cables installed in conduit shall be sealed as described in 501.15(D).

Exception No. 1: Cables leaving an enclosure or room that is unclassified as a result of Type Z pressurization and entering into a Division 2 location shall not require a seal at the boundary.

Exception No. 2: Shielded cables and twisted pair cables shall not require the removal of the shielding material or separation of the twisted pairs, provided the termination is by ~~an approved~~ a LISTED means to minimize the entrance of gases or vapors and prevent propagation of flame into the cable core.

Proposed additional Language;

Cables entering enclosures that are not required to be explosionproof shall be terminated at the point of entrance as follows;

- *With a cable gland or fitting that complies with 501.15(B)(1) or*
- *With a cable gland or fitting, Listed for the cable type and enclosure type.*

Statement of Problem and Substantiation for Public Input

Sealing a cable with an 'approved means' other than one that has been tested to a standard and LISTED by a NRTL, could compromise the integrity of the seal and potentially led to a dangerous situation

The sealing requirements for enclosures that are required to be explosionproof in Class I Division 2 are very clear. However, there is not any guidance on how cables are terminated when entering enclosures that are NOT required to be explosionproof. In such applications, normal practice is to terminate the cable with a gland/fitting that is Listed by a NRTL for the cable type and enclosure type, e.g. MC-HL Cable, Enclosure Type Nema 4x. This creates confusion in industry as such cable glands CANNOT be Listed for Class i Division 2, but are instead Listed for Ordinary Locations.

Submitter Information Verification

Submitter Full Name: James Hughes
Organization: CMP Products Texas Inc
Affiliation: CMP Products Texas Inc
Street Address:
City:
State:
Zip:

Submittal Date: Fri Aug 28 16:26:13 EDT 2020

Committee: NEC-P14

Committee Statement

Resolution: FR-8688-NFPA 70-2021

Statement: Section 501.15(E)(1) Exception No. 2 was revised to clarify that conductors shall be sealed in accordance with the instructions provided with the listed fittings required by 501.15(C). The proposed text to add requirements for cable fittings was not accepted as these requirements are specified elsewhere in the code depending on cable and enclosure type. Exception No.1 is revised to align with NFPA 496.

Public Input No. 2522-NFPA 70-2020 [Section No. 501.15 [Excluding any Sub-Sections]]

Seals in conduit and cable systems shall comply with 501.15(A) through (F). Sealing compound shall be used in Type MI cable termination fittings to exclude moisture and other fluids from the cable insulation.

~~Informational Note No. 1: Seals are provided in conduit and cable systems to minimize the passage of gases and vapors and prevent the passage of flames from one portion of the electrical installation to another through the conduit. Such communication through Type MI cable is inherently prevented by construction of the cable. Unless specifically designed and tested for the purpose, conduit and cable seals are not intended to prevent the passage of liquids, gases, or vapors at a continuous pressure differential across the seal. Even at differences in pressure across the seal equivalent to a few inches of water, there may be a slow passage of gas or vapor through a seal and through conductors passing through the seal. Temperature extremes and highly corrosive liquids and vapors can affect the ability of seals to perform their intended function.~~

~~Informational Note No. 2: Gas or vapor leakage and propagation of flames may occur through the interstices between the strands of standard stranded conductors larger than 2 AWG. Special conductor constructions, such as compacted strands or sealing of the individual strands, are means of reducing leakage and preventing the propagation of flames.~~

Statement of Problem and Substantiation for Public Input

The two informational notes elude to problems that exist in the passage of gases or vapors through cables but there are no solutions to correcting them. The notes do not provide guidance for most users of the NEC. They should be deleted or code requirements written to provide protection methods.

Submitter Information Verification

Submitter Full Name: John Simmons
Organization: Florida East Coast JATC
Street Address:
City:
State:
Zip:
Submittal Date: Sun Aug 23 20:55:55 EDT 2020
Committee: NEC-P14

Committee Statement

Resolution: The informational notes provide guidance on sealing. Solutions for proper sealing are to utilize Listed fittings meeting 501.15(A) through (F) or to use special conductor constructions as stated.

Public Input No. 103-NFPA 70-2019 [Section No. 501.17]

501. ~~17 Process Sealing.~~

~~This section shall apply to process-connected equipment, which includes, but is not limited to, canned pumps, submersible pumps, flow, pressure, temperature, or analysis measurement instruments. A process seal is a device to prevent the migration of process fluids from the designed containment into the external electrical system~~

17 Process Seals for Process-Connected Electrical and Instrumentation Equipment.

(A) Process Sealing . Process-connected electrical equipment that incorporates a single process seal, such as a single compression seal, diaphragm, or tube to prevent flammable or combustible fluids from entering a conduit or cable system capable of transmitting fluids, shall be provided with an additional means to mitigate a single process seal failure. The additional means may include, but are not limited to, the following:

(1) A suitable barrier meeting the process temperature and pressure conditions that the barrier will be subjected to upon failure of the single process seal. There shall be a vent or drain between the single process seal and the suitable barrier. Indication of the single process seal failure shall be provided by visible leakage, an audible whistle, or other means of monitoring.

(2) A listed Type MI cable assembly, rated at not less than 125 percent of the process pressure and not less than 125 percent of the maximum process temperature (in degrees Celsius), installed between the cable or conduit and the single process seal.

(3) A drain or vent located between the single process seal and a conduit or cable seal. The drain or vent shall be sufficiently sized to prevent overpressuring the conduit or cable seal above 6 in. water column (1493 Pa). Indication of the single process seal failure shall be provided by visible leakage, an audible whistle, or other means of monitoring.

(4) An add-on secondary seal marked “secondary seal” and rated for the pressure and temperature conditions to which it will be subjected upon failure of the single process seal.

Process-connected electrical equipment that does not rely on a single process seal or is listed and marked “single seal”, “dual seal”, or “dual seal without annunciation” shall not be required to be provided with an additional means of sealing.

Process-connected electrical equipment marked “single seal — install conduit or cable seal” shall be sealed in accordance

~~with 501~~
with 501 .15 .

Informational Note No.1 :

For construction and testing requirements for process sealing for listed and marked single seal, dual seal, or secondary seal equipment, refer to ANSI/UL 122701-2017, *Requirements for Process Sealing Between Electrical Systems and Flammable or Combustible Process Fluids* .

Informational Note No.2: Explosionproof conduit and cable seals identified only to prevent flame or vapor propagation through a raceway system or cable assembly may not be acceptable as an additional process seal required by this section.

Statement of Problem and Substantiation for Public Input

The present wording of 501.17 does not comply with the NEC Style Manual Section 2.2.2.2 as it

includes definitions which should be located in 501.2.

This section as it exists is very confusing and is creating issues with interpretation among users, inspectors, manufacturers and design engineers. The body of a requirement should not contain a definition which this section does when it defines a "process seal".

Furthermore, ANSI/UL 122701-2017 provides adequate guidance and does not need to be repeated in the NEC presenting the possibility of conflicts between the two documents.

Related Public Inputs for This Document

Related Input	Relationship
Public Input No. 2133-NFPA 70-2020 [New Section after 501.1]	

Submitter Information Verification

Submitter Full Name: Paul Guidry
Organization: Fluor Enterprises, Inc.
Affiliation: Associated Builders and Contractors
Street Address:
City:
State:
Zip:
Submittal Date: Tue Nov 12 21:29:04 EST 2019
Committee: NEC-P14

Committee Statement

Resolution: The text being deleted by the PI is correct as written. The text is not a definition, it provides examples of the process-connected equipment being addressed and explains the purpose of the seal. Section 2.2.2.2 addresses the style of definitions and does not apply to the text. The section is subdivided into a single first level subdivision which does not comply with the example provided for subdividing sections in Section 2.1.5 of the NEC Style Manual. There should be at least two first level subdivisions. Informational Note No. 2 provides an interpretation which is not permitted in Section 3.1.3 of the NEC Style Manual.

Public Input No. 1138-NFPA 70-2020 [Section No. 501.30]

501.30 Grounding and Bonding, Class I, Divisions 1 and 2.

Regardless of the voltage of the electrical system, wiring and equipment in Class I, Division 1 and 2 locations shall be grounded as specified in Article 250 and in accordance with the requirements of 501.30(A) and (B).

(A) Bonding.

~~The locknut-bushing and double-locknut types of contacts~~ Standard locknuts shall not be depended on for bonding purposes~~, but bonding jumpers with proper fittings or other approved means of bonding~~ . Listed devices such as bonding-type locknuts or bushing with bonding jumpers shall be used. Such means of bonding shall apply to all intervening raceways, fittings, boxes, enclosures, and so forth between Class I locations and the point of grounding for service equipment or point of grounding of a separately derived system.

Exception: The specific bonding means shall be required only to the nearest point where the grounded circuit conductor and the grounding electrode are connected together on the line side of the building or structure disconnecting means as specified in 250.32(B), provided the branch-circuit overcurrent protection is located on the load side of the disconnecting means.

(B) Types of Equipment Grounding Conductors.

Flexible metal conduit and liquidtight flexible metal conduit shall include an equipment bonding jumper or equipment grounding conductor of the wire type in compliance with 250.102.

Exception: In Class I, Division 2 locations, the bonding jumper shall be permitted to be deleted where all of the following conditions are met:

(1) Listed liquidtight flexible metal conduit 1.8 m (6 ft) or less in length, with fittings listed for grounding, is used.

(2) Overcurrent protection in the circuit is limited to 10 amperes or less.

(3) The load is not a power utilization load.

Statement of Problem and Substantiation for Public Input

The current language uses terms that are vague and unenforceable ("proper fittings"). This PI borrows language from 250.92, which is the intent of this requirement. It also allows for a an equipment grounding conductor of the wire type to be installed in lieu of a bonding jumper. The original proposal from 2011 was to clarify that the FMC should not be relied upon as the sole effective ground-fault current path, and installing an EGC satisfies that criteria.

Related Public Inputs for This Document

Related Input	Relationship
Public Input No. 1139-NFPA 70-2020 [Section No. 502.30]	
Public Input No. 1140-NFPA 70-2020 [Section No. 503.30]	

Submitter Information Verification

Submitter Full Name: Ryan Jackson
Organization: Ryan Jackson
Street Address:

City:
State:
Zip:
Submittal Date: Mon May 18 16:12:19 EDT 2020
Committee: NEC-P14

Committee Statement

Resolution: There is no substantiation to reduce the bonding options to just listed locknuts and bonding jumpers. 250.92 allows other methods in addition to this and there has been no substantiation that the other methods are unsafe. The requirements in the current text are clear what is required, here.

Public Input No. 2124-NFPA 70-2020 [Section No. 501.30]

501.30 Grounding and Bonding, Class I, Divisions 1 and 2.

~~Regardless of the voltage of the electrical system, wiring and~~ All electrical equipment in ~~Class I~~ Class I , ~~Division~~ Divisions 1 and 2 ~~locations~~ shall be grounded ~~as specified in Article 250 and in accordance with the requirements of 501.30(A) and (B).~~

~~**(A)** Bonding.~~

~~The locknut-bushing and double-locknut types of contacts shall not be depended on for bonding purposes, but bonding jumpers with proper fittings or other approved means of bonding shall be used. Such means of bonding shall apply to all intervening raceways, fittings, boxes, enclosures, and so forth between Class I locations and the point of grounding for service equipment or point of grounding of a separately derived system.~~

~~*Exception: The specific bonding means shall be required only to the nearest point where the grounded circuit conductor and the grounding electrode are connected together on the line side of the building or structure disconnecting means as specified in 250.32(B) , provided the branch-circuit overcurrent protection is located on the load side of the disconnecting means.*~~

~~**(B)** Types of Equipment Grounding Conductors.~~

~~Flexible metal conduit and liquidtight flexible metal conduit shall include an equipment bonding jumper of the wire type in compliance with 250.102 .~~

~~*Exception: In Class I, Division 2 locations, the bonding jumper shall be permitted to be deleted where all of the following conditions are met:*~~

~~*(1) Listed liquidtight flexible metal conduit 1.8 m (6 ft) or less in length, with fittings listed for grounding, is used.*~~

~~*(2) Overcurrent protection in the circuit is limited to 10 amperes or less.*~~

~~*(3) The load is not a power utilization load.*~~

and bonded as required in Article 250.

Informational Note: See 250.100 for specific grounding and bonding requirements for hazardous (classified) locations.

Statement of Problem and Substantiation for Public Input

This is a companion proposal to one submitted to revise Section 250.100 and other sections.

Related Public Inputs for This Document

Related Input	Relationship
Public Input No. 2120-NFPA 70-2020 [Article 100]	Grounding and Bonding in hazardous locations
Public Input No. 2125-NFPA 70-2020 [Section No. 502.30]	
Public Input No. 2127-NFPA 70-2020 [Section No. 505.25]	
Public Input No. 2129-NFPA 70-2020 [Section No. 348.60]	

Public Input No. 2130-NFPA 70-2020 [Section No. 350.60]

Public Input No. 2131-NFPA 70-2020 [Section No. 506.25]

Public Input No. 2132-NFPA 70-2020 [Section No. 250.118]

Submitter Information Verification

Submitter Full Name: Paul Guidry
Organization: Fluor Enterprises, Inc.
Affiliation: Associated Builders and Contractors
Street Address:
City:
State:
Zip:
Submittal Date: Sun Aug 02 11:59:47 EDT 2020
Committee: NEC-P14

Committee Statement

Resolution: The hazardous location requirements are stated in Chapter 5 where CMP14 has purview. The code making panel does not agree with moving this text entirely to Article 250 which is the ordinary location requirements, covered by a different panel. In addition, referring to an entire article is a style manual violation.

Public Input No. 2606-NFPA 70-2020 [Section No. 501.30]

501.30 Grounding and Bonding, Class I, Divisions 1 and 2.

Regardless of the voltage of the electrical system, wiring and equipment in ~~Class I~~ Class I , Division 1 and 2 locations shall ~~be grounded as specified in Article~~ 250 ~~and in accordance~~ comply with the requirements of 501.30(A) and 501.30 (B).

(A)

Grounding

Wiring and equipment in Class I, Division 1 and 2 locations shall be grounded as required in Article 250.

(B) Bonding.

The locknut-bushing and double-locknut types of contacts shall not be depended on for bonding purposes, but bonding jumpers with proper fittings or other approved means of bonding shall be used. Such means of bonding shall apply to all intervening raceways, fittings, boxes, enclosures, and ~~so forth~~ other parts of raceway systems between Class I locations and the point of grounding for service equipment or point of grounding of a separately derived system.

Exception: The specific bonding means shall be required only to the nearest point where the grounded circuit conductor and the grounding electrode are connected together on the line side of the building or structure disconnecting means as specified in 250.32(B), provided the branch-circuit overcurrent protection is located on the load side of the disconnecting means.

(B) Types of Equipment Grounding Conductors.

Flexible metal conduit and liquidtight flexible metal conduit shall include an equipment bonding jumper of the wire type in compliance with 250.102.

Exception: In Class I, Division 2 locations, the bonding jumper shall be permitted to be deleted where all of the following conditions are met:

(1) Listed liquidtight flexible metal conduit 1.8 m (6 ft) or less in length, with fittings listed for grounding, is used.

(2) Overcurrent protection in the circuit is limited to 10 amperes or less.

(3) The load is not a power utilization load.

Statement of Problem and Substantiation for Public Input

Section 501.30 provides requirements for grounding and bonding. There is only one requirement for grounding, and it is to comply with Article 250. All the other requirements in the section apply to bonding, however the current text has a bonding requirement under subdivision (B) which is titled "types of equipment grounding conductors". The subdivisions address an equipment bonding jumper and refers to 250.102 which does not apply to equipment grounding conductors. A major part of this proposal reorganizes the section and places the grounding requirement in subdivision (A) Grounding, and the bonding requirements in subdivision (B) Bonding. The proposal changed the word "approved" in the phrase "or other approved means" to "identified". The word approved places the responsibility of deciding the suitability of a product on the authority having jurisdiction which in some cases may lead to inconsistency. The term identified provides the AHJ with some guidance in deciding the suitability of the bonding means. Also, the phrase "so forth" is changed to "other parts of raceway systems". The phrase so forth is ambiguous. The revised wording would add clarity.

Related Public Inputs for This Document

Related Input	Relationship
Public Input No. 2596-NFPA 70-2020 [Section No. 505.25]	
Public Input No. 2597-NFPA 70-2020 [Section No. 506.25]	
Public Input No. 2602-NFPA 70-2020 [Section No. 502.30]	
Public Input No. 2604-NFPA 70-2020 [Section No. 503.30]	

Submitter Information Verification

Submitter Full Name: John Simmons
Organization: Florida East Coast JATC
Street Address:
City:
State:
Zip:
Submittal Date: Tue Aug 25 16:01:32 EDT 2020
Committee: NEC-P14

Committee Statement

Resolution: FR-8391-NFPA 70-2021

Statement: Section 4.1.4 of the 2020 NEC Style Manual prohibits references to an entire article, with the exception of Article 100. As such, the corresponding language in this section is revised to refer to Parts V and VI of Article 250 in compliance with the Style Manual, without changing the intent of the section. The exceptions have been revised to positive text as directed by the Style Manual. In addition, the section is updated to require “bonding and grounding” to meet the intent of the Article 250 requirements. The words “in accordance with the requirements of” do not add to the charging language and are deleted for brevity. The committee is deleting “and so forth” and adding cable trays into this section to make it clear that cable trays must be bonded in the same manner as raceways. The code panel is removing the word “intervening” because it is unnecessary but adding “metal” so it’s clear that this requirement does not apply to nonmetallic raceways or cable trays. The requirement for metal struts, angles, or channels is added to make it clear when they are used for type TC-ER, PLTC-ER, or ITC-ER cables, they must be bonded accordingly. Finally, “Power Utilization Load” is currently not defined and in the interest of usability, the code making panel is clarifying the intent by stating in which circuits flexible liquidtight metal conduit is not required to have an additional internal equipment bonding jumper.

Public Input No. 2941-NFPA 70-2020 [Section No. 501.30]

501.30 Grounding and Bonding, Class I, Divisions 1 and 2.

Regardless of the voltage of the electrical system, wiring and equipment in Class I, Division 1 and 2 locations shall be ~~grounded as specified in Article 250~~ bonded in accordance with 250.100 and in accordance with the requirements of 501.30(A) and (B).

(A) Bonding.

The locknut-bushing and double-locknut types of contacts shall not be depended on for bonding purposes, but bonding jumpers with proper fittings or other approved means of bonding shall be used. Such means of bonding shall apply to all intervening raceways, fittings, boxes, enclosures, and so forth between Class I locations and the point of grounding for service equipment or point of grounding of a separately derived system.

Exception: The specific bonding means shall be required only to the nearest point where the grounded circuit conductor and the grounding electrode are connected together on the line side of the building or structure disconnecting means as specified in 250.32(B), provided the branch-circuit overcurrent protection is located on the load side of the disconnecting means.

(B) Types of Equipment Grounding Conductors.

Flexible metal conduit and liquidtight flexible metal conduit shall include an equipment bonding jumper of the wire type in compliance with 250.102.

Exception: In Class I, Division 2 locations, the bonding jumper shall be permitted to be deleted where all of the following conditions are met:

(1) Listed liquidtight flexible metal conduit 1.8 m (6 ft) or less in length, with fittings listed for grounding, is used.

(2) Overcurrent protection in the circuit is limited to 10 amperes or less.

(3) The load is not a power utilization load.

Statement of Problem and Substantiation for Public Input

The reference to an entire Article I think doen't comply with the Style Manual, and the proper reference is 250.100.

Submitter Information Verification

Submitter Full Name: Mike Holt
Organization: Mike Holt Enterprises Inc
Street Address:
City:
State:
Zip:
Submittal Date: Thu Sep 03 13:20:46 EDT 2020
Committee: NEC-P14

Committee Statement

Resolution: FR-8391-NFPA 70-2021

Statement: Section 4.1.4 of the 2020 NEC Style Manual prohibits references to an entire article, with the exception of Article 100. As such, the corresponding language in this section is revised to refer to Parts V and VI of Article 250 in compliance with the Style Manual, without changing the intent of the section. The exceptions have been revised to positive text as directed by the Style Manual. In addition, the section is updated to require “bonding and grounding” to meet the intent of the Article 250 requirements. The words “in accordance with the requirements of” do not add to the charging language and are deleted for brevity. The committee is deleting “and so forth” and adding cable trays into this section to make it clear that cable trays must be bonded in the same manner as raceways. The code panel is removing the word “intervening” because it is unnecessary but adding “metal” so it’s clear that this requirement does not apply to nonmetallic raceways or cable trays. The requirement for metal struts, angles, or channels is added to make it clear when they are used for type TC-ER, PLTC-ER, or ITC-ER cables, they must be bonded accordingly. Finally, “Power Utilization Load” is currently not defined and in the interest of usability, the code making panel is clarifying the intent by stating in which circuits flexible liquidtight metal conduit is not required to have an additional internal equipment bonding jumper.

Public Input No. 724-NFPA 70-2020 [Section No. 501.30(B)]

(B)_ Types of Equipment Grounding Conductors.

Flexible metal conduit and liquidtight flexible metal conduit shall include an equipment bonding jumper of the wire type in compliance with 250.102.

Exception: In Class I, Division 2 locations, the bonding jumper shall be permitted to be deleted where all of the following conditions are met:

(1) Listed liquidtight flexible metal conduit 1.8 m (6 ft) or less in length, with fittings listed for grounding, is used.

(2) Overcurrent protection in the circuit is limited to 10 amperes or less.

(3) The load is ~~not a power utilization load~~ - part of a meter, instrument or relay circuit .

Statement of Problem and Substantiation for Public Input

In the Exception to NEC 501.30(B), the term “power utilization load” is used. As this is not a defined term, and as there is some question as to what it is intended to mean, clarification seems needed. Use of the term "meter, instrument or relay circuit" was selected based on the text of 501.105.

Submitter Information Verification

Submitter Full Name: Paul Kelly
Organization: UL LLC
Street Address:
City:
State:
Zip:
Submittal Date: Fri Mar 20 15:17:11 EDT 2020
Committee: NEC-P14

Committee Statement

Resolution: FR-8391-NFPA 70-2021

Statement: Section 4.1.4 of the 2020 NEC Style Manual prohibits references to an entire article, with the exception of Article 100. As such, the corresponding language in this section is revised to refer to Parts V and VI of Article 250 in compliance with the Style Manual, without changing the intent of the section. The exceptions have been revised to positive text as directed by the Style Manual. In addition, the section is updated to require “bonding and grounding” to meet the intent of the Article 250 requirements. The words “in accordance with the requirements of” do not add to the charging language and are deleted for brevity. The committee is deleting “and so forth” and adding cable trays into this section to make it clear that cable trays must be bonded in the same manner as raceways. The code panel is removing the word “intervening” because it is unnecessary but adding “metal” so it’s clear that this requirement does not apply to nonmetallic raceways or cable trays. The requirement for metal struts, angles, or channels is added to make it clear when they are used for type TC-ER, PLTC-ER, or ITC-ER cables, they must be bonded accordingly. Finally, “Power Utilization Load” is currently not defined and in the interest of usability, the code making panel is clarifying the intent by stating in

which circuits flexible liquidtight metal conduit is not required to have an additional internal equipment bonding jumper.

Public Input No. 3282-NFPA 70-2020 [Section No. 501.30 [Excluding any Sub-Sections]]

Regardless of the voltage of the electrical system, wiring and equipment in Class I, Division 1 and 2 locations shall be grounded as specified in Parts V and VI of Article 250 and in accordance with the requirements of 501.30(A) and (B).

Statement of Problem and Substantiation for Public Input

The style manual does not permit references to a complete article. The reference must to be sections or parts of an article.

Submitter Information Verification

Submitter Full Name: Don Ganiere
Organization: [Not Specified]
Street Address:
City:
State:
Zip:
Submittal Date: Mon Sep 07 14:42:41 EDT 2020
Committee: NEC-P14

Committee Statement

Resolution: FR-8391-NFPA 70-2021

Statement: Section 4.1.4 of the 2020 NEC Style Manual prohibits references to an entire article, with the exception of Article 100. As such, the corresponding language in this section is revised to refer to Parts V and VI of Article 250 in compliance with the Style Manual, without changing the intent of the section. The exceptions have been revised to positive text as directed by the Style Manual. In addition, the section is updated to require “bonding and grounding” to meet the intent of the Article 250 requirements. The words “in accordance with the requirements of” do not add to the charging language and are deleted for brevity. The committee is deleting “and so forth” and adding cable trays into this section to make it clear that cable trays must be bonded in the same manner as raceways. The code panel is removing the word “intervening” because it is unnecessary but adding “metal” so it’s clear that this requirement does not apply to nonmetallic raceways or cable trays. The requirement for metal struts, angles, or channels is added to make it clear when they are used for type TC-ER, PLTC-ER, or ITC-ER cables, they must be bonded accordingly. Finally, “Power Utilization Load” is currently not defined and in the interest of usability, the code making panel is clarifying the intent by stating in which circuits flexible liquidtight metal conduit is not required to have an additional internal equipment bonding jumper.

Public Input No. 4075-NFPA 70-2020 [Section No. 501.30 [Excluding any Sub-Sections]]

Regardless of the voltage of the electrical system, wiring and equipment in Class I, Division 1 and 2 locations shall be grounded as specified in Article 250 and in accordance ~~with the requirements of~~ with 501.30(A) and (B).

Statement of Problem and Substantiation for Public Input

Deleting the words "the requirements of" does not change the meaning of the section.
The panel should consider revising the section due to a Style Manual issue 4.1.4 where a section shall not reference a complete article.

Submitter Information Verification

Submitter Full Name: David Williams
Organization: Delta Charter Township
Street Address:
City:
State:
Zip:
Submittal Date: Wed Sep 09 20:09:21 EDT 2020
Committee: NEC-P14

Committee Statement

Resolution: FR-8391-NFPA 70-2021

Statement: Section 4.1.4 of the 2020 NEC Style Manual prohibits references to an entire article, with the exception of Article 100. As such, the corresponding language in this section is revised to refer to Parts V and VI of Article 250 in compliance with the Style Manual, without changing the intent of the section. The exceptions have been revised to positive text as directed by the Style Manual. In addition, the section is updated to require “bonding and grounding” to meet the intent of the Article 250 requirements. The words “in accordance with the requirements of” do not add to the charging language and are deleted for brevity. The committee is deleting “and so forth” and adding cable trays into this section to make it clear that cable trays must be bonded in the same manner as raceways. The code panel is removing the word “intervening” because it is unnecessary but adding “metal” so it’s clear that this requirement does not apply to nonmetallic raceways or cable trays. The requirement for metal struts, angles, or channels is added to make it clear when they are used for type TC-ER, PLTC-ER, or ITC-ER cables, they must be bonded accordingly. Finally, “Power Utilization Load” is currently not defined and in the interest of usability, the code making panel is clarifying the intent by stating in which circuits flexible liquidtight metal conduit is not required to have an additional internal equipment bonding jumper.

Public Input No. 4419-NFPA 70-2020 [Section No. 501.30 [Excluding any Sub-Sections]]

Regardless of the voltage of the electrical system, wiring and equipment in Class I, Division 1 and 2 locations shall be bonded and grounded as specified in Parts V and VI of Article 250 and in accordance with the requirements of 501.30(A) and (B).

Statement of Problem and Substantiation for Public Input

Section 4.1.4 of the 2020 NEC(r) Style Manual prohibits references to an entire article, with the exception of Article 100. As such, it is proposed to refer to Parts V and VI of Article 250 in compliance with the Style Manual, without changing the intent of the section.

Related Public Inputs for This Document

Related Input	Relationship
Public Input No. 4422-NFPA 70-2020 [Section No. 502.30 [Excluding any Sub-Sections]]	

Submitter Information Verification

Submitter Full Name: Richard Holub
Organization: The DuPont Company, Inc.
Street Address:
City:
State:
Zip:
Submittal Date: Thu Sep 10 12:46:03 EDT 2020
Committee: NEC-P14

Committee Statement

Resolution: FR-8391-NFPA 70-2021

Statement: Section 4.1.4 of the 2020 NEC Style Manual prohibits references to an entire article, with the exception of Article 100. As such, the corresponding language in this section is revised to refer to Parts V and VI of Article 250 in compliance with the Style Manual, without changing the intent of the section. The exceptions have been revised to positive text as directed by the Style Manual. In addition, the section is updated to require “bonding and grounding” to meet the intent of the Article 250 requirements. The words “in accordance with the requirements of” do not add to the charging language and are deleted for brevity. The committee is deleting “and so forth” and adding cable trays into this section to make it clear that cable trays must be bonded in the same manner as raceways. The code panel is removing the word “intervening” because it is unnecessary but adding “metal” so it’s clear that this requirement does not apply to nonmetallic raceways or cable trays. The requirement for metal struts, angles, or channels is added to make it clear when they are used for type TC-ER, PLTC-ER, or ITC-ER cables, they must be bonded accordingly. Finally, “Power Utilization Load” is currently not defined and in the interest of usability, the code making panel is clarifying the intent by stating in which circuits flexible liquidtight metal conduit is not required to have an additional

internal equipment bonding jumper.

Public Input No. 3205-NFPA 70-2020 [Section No. 501.35]

501.~~35~~ ~~Surge~~ 35 Overvoltage Protection.

(A) Class I, Division 1.

~~Surge~~ Overvoltage protection devices, surge arresters, surge-protective devices, and capacitors shall be installed in enclosures identified for Class I, Division 1 locations. Surge-protective capacitors shall be of a type designed for specific duty.

(B) Class I, Division 2.

~~Surge~~ Overvoltage protection devices, surge arresters and surge-protective devices shall be nonarcing, such as metal-oxide varistor (MOV) sealed type, and surge-protective capacitors shall be of a type designed for specific duty. Enclosures shall be permitted to be of the general-purpose type. ~~Surge~~ Overvoltage protection of types other than described in this paragraph shall be installed in enclosures identified for Class I, Division 1 locations.

Additional Proposed Changes

File Name	Description	Approved
Code_Input.docx	Improvement for OVERVOLTAGE protection	

Statement of Problem and Substantiation for Public Input

In the 2020 NEC cycle, ARTICLES 280 and 285 were combined to make ARTICLE 242. This was a positive change that began to address the issue of OVERVOLTAGE as a technical subject apart from particular product methods (SPDs and Surge Arresters). There are other technologies and products to address the issue of OVERVOLTAGE. This input attempts to add one such technology as well as correlate the other code references to the subject of OVERVOLTAGE, surge protective devices, and surge arresters to be consistent. This is important to allow for other technologies to be utilized without prejudice to certain products promoted by manufacturers.

Related Public Inputs for This Document

Related Input	Relationship
Public Input No. 3200-NFPA 70-2020 [Section No. 242.1]	
Public Input No. 3202-NFPA 70-2020 [New Article after 100]	
Public Input No. 3203-NFPA 70-2020 [New Article after 242]	
Public Input No. 3206-NFPA 70-2020 [Section No. 502.35]	
Public Input No. 3208-NFPA 70-2020 [Section No. 551.72(E)]	
Public Input No. 3209-NFPA 70-2020 [Section No. 490.24]	
Public Input No. 3210-NFPA 70-2020 [Section No. 490.48(A)]	
Public Input No. 3211-NFPA 70-2020 [Section No. 620.51(E)]	
Public Input No. 3212-NFPA 70-2020 [Section No. 645.18]	
Public Input No. 3214-NFPA 70-2020 [Section No. 670.6]	
Public Input No. 3216-NFPA 70-2020 [Section No. 694.7(D)]	
Public Input No. 3217-NFPA 70-2020 [Section No. 695.15]	
Public Input No. 3218-NFPA 70-2020 [Section No. 700.8]	
Public Input No. 3219-NFPA 70-2020 [Section No. 708.20(D)]	

Submitter Information Verification

Submitter Full Name: Karl Cunningham
Organization: Self Employed
Street Address:
City:
State:
Zip:
Submittal Date: Sun Sep 06 18:14:40 EDT 2020
Committee: NEC-P14

Committee Statement

Resolution: Statement: CMP-14 understands that this change is being considered by CMP-10 and will revisit this recommendation during the Second Draft phase of the process.

Substantiation for Changes: In the 2020 NEC cycle, ARTICLES 280 and 285 were combined to make ARTICLE 242. This was a positive change that began to address the issue of OVERVOLTAGE as a technical subject apart from particular product methods (SPDs and Surge Arresters). There are other technologies and products to address the issue of OVERVOLTAGE. This input attempts to add one such technology as well as correlate the other code references to the subject of OVERVOLTAGE, surge protective devices, and surge arresters to be consistent. This is important to allow for other technologies to be utilized without prejudice to certain products promoted by manufacturers.

ARTICLE 100 - DEFINITIONS

Voltage Stabilizing Ground Reference (VSGR) System – an engineered assembly of interconnected passive inductive devices that utilize mutual counter electro-magnetic inductance to stabilize phase voltages of a connected supply system with respect to each other and to ground.

ARTICLE 242 Overvoltage Protection

Part I. General

242.1 Scope.
This article provides the general requirements, installation requirements, and connection requirements for overvoltage protection and overvoltage protective devices. Part II covers surge-protective devices (SPDs) permanently installed on premises wiring systems of not more than 1000 volts, nominal, while Part III covers surge arresters permanently installed on premises wiring systems over 1000 volts, nominal. Part IV covers Voltage Stabilizing Ground Reference (VSGR) systems permanently installed on premises wiring systems for any voltage.

Informational Note: Article 242 combines and replaces Articles 280 and 285 in *NFPA 70*-2017.

242.3 Other Articles.
Equipment shall be protected against overvoltage in accordance with the article in this *Code* that covers the type of equipment or location specified in Table 242.3.

Table 242.3 Other Articles

Equipment	Article
Class I locations	501
Class II locations	502
Community antenna television and radio distribution systems	820
Critical operations power systems	708

Table 242.3 Other Articles

Equipment	Article
Elevators, dumbwaiters, escalators, moving walks, platform lifts, and stairway chairlifts	620
Emergency systems	700
Equipment over 1000 volts, nominal	490
Fire pumps	695
Industrial machinery	670
Information technology equipment	645
Modular data centers	646
Outdoor overhead conductors over 1000 volts	399
Radio and television equipment	810
Receptacles, cord connectors, and attachment plugs (caps)	406
Wind electric systems	694

Part II. Surge-Protective Devices (SPDs), 1000 Volts or Less
Informational Note: Surge arresters 1000 volts or less are also known as Type 1 SPDs.

242.6 Uses Not Permitted.
An SPD device shall not be installed in the following:

1. (1)

   Circuits over 1000 volts

2. (2)

   On ungrounded systems, impedance grounded systems, or corner grounded delta systems unless listed specifically for use on these systems

3. (3)

   Where the rating of the SPD is less than the maximum continuous phase-to-ground voltage at the power frequency available at the point of application

242.8 Listing.
An SPD shall be a listed device.

242.10 Short-Circuit Current Rating.
The SPD shall be marked with a short-circuit current rating and shall not be installed at a point on the system where the available fault current is in excess of that rating. This marking requirement shall not apply to receptacles.

242.12 Type 1 SPDs.
Type 1 SPDs shall be installed in accordance with 242.12(A) and (B).

242.12(A) Installation.
Type 1 SPDs shall be permitted to be connected in accordance with one of the following:

1. (1)

   To the supply side of the service disconnect as permitted in 230.82(4)

2. (2)

   As specified in 242.14

242.12(B) At the Service.
When installed at services, Type 1 SPDs shall be connected to one of the following:

1. (1)

   Grounded service conductor

2. (2)

   Grounding electrode conductor

3. (3)

   Grounding electrode for the service

4. (4)

   Equipment grounding terminal in the service equipment

242.14 Type 2 SPDs.
Type 2 SPDs shall be installed in accordance with 242.14(A) through (C).

242.14(A) Service-Supplied Building or Structure.
Type 2 SPDs shall be connected anywhere on the load side of a service disconnect overcurrent device required in 230.91 unless installed in accordance with 230.82(8).

242.14(B) Feeder-Supplied Building or Structure.
Type 2 SPDs shall be connected at the building or structure anywhere on the load side of the first overcurrent device at the building or structure.

242.14(C) Separately Derived System.
The SPD shall be connected on the load side of the first overcurrent device in a separately derived system.

242.16 Type 3 SPDs.
Type 3 SPDs shall be permitted to be installed on the load side of branch-circuit overcurrent protection up to the equipment served. If included in the manufacturer's instructions, the Type 3 SPD connection shall be a minimum 10 m (30 ft) of conductor distance from the service or separately derived system disconnect.

242.18 Type 4 and Other Component Type SPDs.
Type 4 component assemblies and other component type SPDs shall only be installed by the equipment manufacturer.

242.20 Number Required.
Where used at a point on a circuit, the SPD shall be connected to each ungrounded conductor.

242.22 Location.
SPDs shall be permitted to be located indoors or outdoors and shall be made inaccessible to unqualified persons unless listed for installation in accessible locations.

242.24 Routing of Connections.
The conductors used to connect the SPD to the line or bus and to ground shall not be any longer than necessary and shall avoid unnecessary bends.

242.26 Connection.
Where an SPD device is installed, it shall comply with 242.12, 242.14, 242.16, 242.28. and 242.30.

242.28 Conductor Size.
Line and grounding conductors shall not be smaller than 14 AWG copper or 12 AWG aluminum.

242.30 Connection Between Conductors.
An SPD shall be permitted to be connected between any two conductors — ungrounded conductor(s), grounded conductor, equipment grounding conductor, or grounding electrode conductor. The grounded conductor and the equipment grounding conductor shall be interconnected only by the normal operation of the SPD during a surge.

242.32 Grounding Electrode Conductor Connections and Enclosures.
Except as indicated in this article, SPD grounding connections shall be made as specified in Article 250, Part III. Grounding electrode conductors installed in metal enclosures shall comply with 250.64(E).

Part III. Surge Arresters, Over 1000 Volts

242.40 Uses Not Permitted.
A surge arrester shall not be installed where the rating of the surge arrester is less than the maximum continuous phase-to-ground voltage at the power frequency available at the point of application.

242.42 Surge Arrester Selection.
The surge arresters shall comply with 242.42(A) and (B).

242.42(A) Rating.
The rating of a surge arrester shall be equal to or greater than the maximum continuous operating voltage available at the point of application.

242.42(A)(1) Solidly Grounded Systems.
The maximum continuous operating voltage shall be the phase-to-ground voltage of the system.

242.42(A)(2) Impedance or Ungrounded System.

The maximum continuous operating voltage shall be the phase-to-phase voltage of the system.

242.42(B) Silicon Carbide Types.

The rating of a silicon carbide-type surge arrester shall be not less than 125 percent of the rating specified in 242.42(A).

Informational Note No. 1: For further information on surge arresters, see IEEE C62.11-2012, *Standard for Metal-Oxide Surge Arresters for Alternating-Current Power Circuits (>1 kV)*, and IEEE C62.22-2009, *Guide for the Application of Metal-Oxide Surge Arresters for Alternating-Current Systems*.

Informational Note No. 2: The selection of a properly rated metal oxide arrester is based on considerations of maximum continuous operating voltage and the magnitude and duration of overvoltages at the arrester location as affected by phase-to-ground faults, system grounding techniques, switching surges, and other causes. See the manufacturer's application rules for selection of the specific arrester to be used at a particular location.

242.44 Number Required.

Where used at a point on a circuit, a surge arrester shall be connected to each ungrounded conductor. A single installation of such surge arresters shall be permitted to protect a number of interconnected circuits if no circuit is exposed to surges while disconnected from the surge arresters.

242.46 Location.

Surge arresters shall be permitted to be located indoors or outdoors. Surge arresters shall be made inaccessible to unqualified persons unless listed for installation in accessible locations.

242.48 Routing of Surge Arrester Equipment Grounding Conductors.

The conductor used to connect the surge arrester to line, bus, or equipment and to an equipment grounding conductor or grounding electrode connection point as provided in 242.50 shall not be any longer than necessary and shall avoid unnecessary bends.

242.50 Connection.

The arrester shall be connected to one of the following:

1. (1)

   Grounded service conductor

2. (2)

   Grounding electrode conductor

3. (3)

   Grounding electrode for the service

4. (4)

   Equipment grounding terminal in the service equipment

242.52 Surge-Arrester Conductors.

The conductor between the surge arrester and the line, and the surge arrester and the grounding connection, shall not be smaller than 6 AWG copper or aluminum.

242.54 Interconnections.

The surge arrester protecting a transformer that supplies a secondary distribution system shall be interconnected as specified in 242.54(A), (B), or (C).

242.54(A) Metal Interconnections.
A metal interconnection shall be made to the secondary grounded circuit conductor or the secondary circuit grounding electrode conductor, if, in addition to the direct grounding connection at the surge arrester, the connection complies with 242.54(A)(1) or (A)(2).

242.54(A)(1) Additional Grounding Connection.
The grounded conductor of the secondary has a grounding connection elsewhere to a continuous metal underground water piping system. In urban water-pipe areas where there are at least four water-pipe connections on the neutral conductor and not fewer than four such connections in each mile of neutral conductor, the metal interconnection shall be permitted to be made to the secondary neutral conductor with omission of the direct grounding connection at the surge arrester.

242.54(A)(2) Multigrounded Neutral System Connection.
The grounded conductor of the secondary system is part of a multigrounded neutral system or static wire of which the primary neutral conductor or static wire has at least four grounding connections in each 1.6 km (1 mile) of line in addition to a grounding connection at each service.

242.54(B) Through Spark Gap or Device.
Where the surge arrester grounding electrode conductor is not connected as in 242.54(A), or where the secondary is not grounded as in 242.54(A) but is otherwise grounded as in 250.52, an interconnection shall be made through a spark gap or listed device as required by 242.54(B)(1) or (B)(2).

242.54(B)(1) Ungrounded or Unigrounded Primary System.
For ungrounded or unigrounded primary systems, the spark gap for a listed device shall have a 60-Hz breakdown voltage of at least twice the primary circuit voltage but not necessarily more than 10 kV, and there shall be at least one other ground on the grounded conductor of the secondary that is not less than 6.0 m (20 ft) distant from the surge-arrester grounding electrode.

242.54(B)(2) Multigrounded Neutral Primary System.
For multigrounded neutral primary systems, the spark gap or listed device shall have a 60-Hz breakdown of not more than 3 kV, and there shall be at least one other ground on the grounded conductor of the secondary that is not less than 6.0 m (20 ft) distant from the surge-arrester grounding electrode.

242.54(C) By Special Permission.
An interconnection of the surge-arrester ground and the secondary neutral conductor, other than as provided in 242.54(A) or (B), shall be permitted to be made only by special permission.

242.56 Grounding Electrode Conductor Connections and Enclosures.
Except as indicated in this article, surge-arrester grounding electrode conductor connections shall be made as specified in Article 250, Parts III and X. Grounding electrode conductors installed in metal enclosures shall comply with 250.64(E).

Part IV. Voltage Stabilizing Ground Reference (VSGR) systems.

242.68 Listing.
A VSGR shall be a listed device or system composed of listed components.

242.70 Short-Circuit Current Rating.
The VSGR shall be marked with a short-circuit current rating and shall not be installed at a point on the system where the available fault current is in excess of that rating.

242.71 Voltage Rating.
The rating of the VSGR shall be equal to or greater than the maximum system continuous operating voltage at the point of application.

242.72 Installation.
VSGRs shall be installed in accordance with 242.72(A) through (C).

242.72(A) Service-Supplied Building or Structure.
VSGR shall be connected anywhere on the load side of a service disconnect overcurrent device required in 230.91 unless installed in accordance with 230.82(8).

242.72(B) Feeder-Supplied Building or Structure.
VSGR shall be connected at the building or structure anywhere on the load side of the first overcurrent device at the building or structure.

242.72(C) Separately Derived System.
VSGR shall be connected on the load side of the first overcurrent device in a separately derived system.

242.82 Location.
VSGRs shall be permitted to be located indoors or outdoors and shall be made inaccessible to unqualified persons unless listed for installation in accessible locations.

242.84 Conductor Size.
Line and grounding conductors shall not be smaller than 14 AWG copper or 12 AWG aluminum.

242.90 Connection Between Conductors.
VSGR connections shall follow the manufacturer's instructions for the system connections.

242.92 Grounding Electrode Conductor Connections and Enclosures.
Except as indicated in this article, VSGR grounding connections shall be made as specified in Article 250, Part III. Grounding electrode conductors installed in metal enclosures shall comply with 250.64(E).

501.35 Overvoltage ~~Surge~~ Protection.

501.35(A) Class I, Division 1.
Overvoltage protection devices, surge arresters, surge-protective devices, and capacitors shall be installed in enclosures identified for Class I, Division 1 locations. Surge-protective capacitors shall be of a type designed for specific duty.

501.35(B) Class I, Division 2.
Overvoltage protection devices, surge arresters and surge-protective devices shall be nonarcing, such as metal-oxide varistor (MOV) sealed type, and surge-protective capacitors shall be of a type designed for specific duty. Enclosures shall be permitted to be of the general-purpose type. Overvoltage ~~Surge~~ protection of types other than described in this paragraph shall be installed in enclosures identified for Class I, Division 1 locations.

502.35 Overvoltage ~~Surge~~ Protection — Class II, Divisions 1 and 2.
Overvoltage protection devices, surge arresters and surge-protective devices installed in a Class II, Division 1 location shall be in suitable enclosures. Surge-protective capacitors shall be of a type designed for specific duty.

551.72(E) Connected Devices.
The use of autotransformers shall not be permitted. The use of listed overvoltage and surge protective devices shall be permitted.

Table 490.24 Minimum Clearance of Live Parts

Note: The values given are the minimum clearance for rigid parts and bare conductors under favorable service conditions. They shall be increased for conductor movement or under unfavorable service conditions or wherever space limitations permit. The selection of the associated impulse withstand voltage for a particular system voltage is determined by the characteristics of the overvoltage ~~surge~~ protective equipment.

490.48(A) Design and Documentation.

(12) Overvoltage ~~Surge~~ arresters

620.51(E) Overvoltage ~~Surge~~ Protection.
Overvoltage protection shall be provided where any of the disconnecting means in 620.51 has been designated as supplying an emergency system load, a legally required system load, or a critical operation power system load, ~~listed surge protection shall be provided.~~

645.18 Overvoltage ~~Surge~~ Protection for Critical Operations Data Systems.
Overvoltage ~~Listed surge~~ protection shall be provided for critical operations data systems.

670.6 Surge Protection.
Industrial machinery with safety interlock control devices not effectively protected from voltage surges on the incoming supply circuit shall have overvoltage ~~surge~~ protection installed.

694.7(D) Overvoltage Protection ~~Surge Protective Devices (SPD).~~
Overvoltage protection ~~A surge protective device~~ shall be installed between a wind electric system and any loads served by the premises electrical system. The ~~surge~~ protective device shall be permitted to be a VSGR, or a Type 3 SPD on the circuit serving a wind electric system, or a Type 2 SPD located anywhere on the load side of the service disconnect. Overvoltage ~~Surge~~ protective devices shall be installed in accordance with Part II of Article 242.

695.15 Overvoltage ~~Surge~~ Protection.
Overvoltage ~~A listed surge~~ protection ~~device~~ shall be provided for ~~installed in or on~~ the fire pump controller.

700.8 Overvoltage ~~Surge~~ Protection.
Overvoltage protection ~~A listed SPD~~ shall be provided-installed in ~~or on~~ for all emergency systems switchboards and panelboards.

708.20(D) Overvoltage ~~Surge~~ Protection ~~Devices~~.

Surge protection devices shall be provided at all facility distribution voltage levels

Public Input No. 3763-NFPA 70-2020 [Section No. 501.35]

501.~~35~~ ~~Surge~~ 35 Overvoltage Protection.

(A) Class I, Division 1.

Surge arresters, surge-protective devices, and capacitors shall be installed in enclosures identified for Class I, Division 1 locations. Surge-protective capacitors shall be of a type designed for specific duty.

(B) Class I, Division 2.

Surge arresters and surge-protective devices shall be nonarcing, such as metal-oxide varistor (MOV) sealed type, and surge-protective capacitors shall be of a type designed for specific duty. Enclosures shall be permitted to be of the general-purpose type. Surge protection of types other than described in this paragraph shall be installed in enclosures identified for Class I, Division 1 locations.

Statement of Problem and Substantiation for Public Input

The purpose of this public input is to correlate and harmonize all of the current sections of the code where “overvoltage protection” is required by:

1. Changing the section titles to “Overvoltage Protection” to properly correlate with Article 242.

2. Correcting the product description to “listed surge-protective device (SPD)” which is defined in Article 100 and correlates with Article 242.

3. Adding a pointer to “Part II. of Article 242” to ensure compliance with all of the requirements for SPDs are met when complying with the rule.

This public input is one of eleven correlating public inputs covering Sections 230.67, 501.35, 502.35, 620.51(E), 645.18, 670.6, 694.7(D), 695.15, 700.8, 708.20(D), and Informative Annex G.

Submitter Information Verification

Submitter Full Name: Megan Hayes
Organization: Nema
Street Address:
City:
State:
Zip:
Submittal Date: Wed Sep 09 12:05:06 EDT 2020
Committee: NEC-P14

Committee Statement

Resolution: Statement: CMP-14 understands that this change is being considered by CMP-10 and will revisit this recommendation during the Second Draft phase of the process. There does not appear to be any recommended changes to (2) and (3).

Public Input No. 2498-NFPA 70-2020 [Section No. 501.105(B)(6)]

(6) Connections.

To facilitate replacements, process control instruments shall be permitted to be connected through flexible cord, attachment plug and receptacle, provided that all of the following conditions apply:

(1) The attachment plug and receptacle are listed for use in Class I, Division 2 locations and listed for use with flexible cords.

Exception No. 1: A Class I, Division 2 listing is not required if the circuit involves only nonincendive field wiring.

Exception No. 2: In industrial establishments ~~where~~ the ~~conditions of maintenance and supervision ensure that only qualified individuals service the installation, the~~ Class I, Division 2 listing is not required when the requirements of 501.105(B)(6)(2), (B)(6)(3), and (B)(6)(4) are satisfied and the receptacle carries a label warning against plugging or unplugging when energized.

(2) The flexible cord does not exceed 900 mm (3 ft), is of a type listed for extra-hard usage, or if listed for hard usage is protected by location.

(3) Only necessary receptacles are provided.

(4) Unless the attachment plug and receptacle are interlocked mechanically or electrically, or otherwise designed so that they cannot be separated when the contacts are energized and the contacts cannot be energized when the plug and socket outlet are separated, a switch complying with 501.105(B)(2) shall be provided so that the attachment plug or receptacle is not depended on to interrupt current.

Exception: The switch shall not be required if the circuit is nonincendive field wiring.

Statement of Problem and Substantiation for Public Input

The term industrial establishment is used throughout Articles 500 through 506. Where the term is used the following text is added: "restricted access where the conditions of maintenance and engineering supervision ensure that only qualified persons install and service the installation. By creating a definition, the added text can be removed from each location where the term appears. This will remove clutter from the section or subdivision where the term appears which will improve readability.

The proposed definition adds the requirement for the AHJ to approve the building for industrial use. This will help to add some consistency to the use of the less restrictive requirements for industrial establishments.

Related Public Inputs for This Document

Related Input	Relationship
Public Input No. 2494-NFPA 70-2020 [New Definition after Definition: Inherently Safe Optical Ra...]	

Submitter Information Verification

Submitter Full Name: John Simmons

Organization: Florida East Coast JATC

Street Address:
City:
State:
Zip:
Submittal Date: Sun Aug 23 16:04:39 EDT 2020
Committee: NEC-P14

Committee Statement

Resolution: The recommendation is predicated on the inclusion of a new definition of Industrial Establishments in Article 100. This requires action by CMP-1 during the First Draft phase of the revision process. If accepted, comments will be submitted for action during the Second Draft phase of the revision process.

Public Input No. 2523-NFPA 70-2020 [Section No. 501.105(B)(6)]

(6) Connections.

To facilitate replacements, process control instruments shall be permitted to be connected through flexible cord, attachment plug and receptacle, provided that all of the following conditions apply:

(1) The attachment plug and receptacle are listed for use in Class I, Division 2 locations and listed for use with flexible cords.

Exception No. 1: A Class I, Division 2 listing is not required if the circuit involves only nonincendive field wiring.

Exception No. 2: In industrial establishments ~~where~~ the ~~conditions of maintenance and supervision ensure that only qualified individuals service the installation, the~~ Class I, Division 2 listing is not required when the requirements of 501.105(B)(6)(2), (B)(6)(3), and (B)(6)(4) are satisfied and the receptacle carries a label warning against plugging or unplugging when energized.

(2) The flexible cord does not exceed 900 mm (3 ft), is of a type listed for extra-hard usage, or if listed for hard usage is protected by location.

(3) Only necessary receptacles are provided.

(4) Unless the attachment plug and receptacle are interlocked mechanically or electrically, or otherwise designed so that they cannot be separated when the contacts are energized and the contacts cannot be energized when the plug and socket outlet are separated, a switch complying with 501.105(B)(2) shall be provided so that the attachment plug or receptacle is not depended on to interrupt current.

Exception: The switch shall not be required if the circuit is nonincendive field wiring.

Statement of Problem and Substantiation for Public Input

The term industrial establishment is used throughout Articles 500 through 506. Where the term is used the following text is added: "restricted access where the conditions of maintenance and engineering supervision ensure that only qualified persons install and service the installation. By creating a definition, the added text can be removed from each location where the term appears. This will remove clutter from the section or subdivision where the term appears which will improve readability.

The proposed definition adds the requirement for the AHJ to approve the building for industrial use. This will help to add some consistency to the use of the less restrictive requirements for industrial establishments.

Related Public Inputs for This Document

Related Input	Relationship
Public Input No. 2494-NFPA 70-2020 [New Definition after Definition: Inherently Safe Optical Ra...]	

Submitter Information Verification

Submitter Full Name: John Simmons

Organization: Florida East Coast JATC

Street Address:
City:
State:
Zip:
Submittal Date: Sun Aug 23 21:12:01 EDT 2020
Committee: NEC-P14

Committee Statement

Resolution: The recommendation is predicated on the inclusion of a new definition of Industrial Establishments in Article 100. This requires action by CMP-1 during the First Draft phase of the revision process. If accepted, comments will be submitted for action during the Second Draft phase of the revision process.

Public Input No. 169-NFPA 70-2019 [Section No. 501.125(B)]

(B)_ Class I, Division 2.

In Class I, Division 2 locations, motors, generators, and other rotating electrical machinery shall comply with (1), (2), or (3). They shall also comply with (4) and (5), if applicable.

(1) Be identified for Class I, Division 2 locations, or

(2) Be identified for Class I, Division 1 locations where sliding contacts, centrifugal or other types of switching mechanism (including motor overcurrent, overloading, and overtemperature devices), or integral resistance devices, either while starting or while running, are employed, or

(3) Be open or nonexplosionproof enclosed motors, such as squirrel-cage induction motors without brushes, switching mechanisms, or similar arc-producing devices that are not identified for use in a Class I, Division 2 location.

(4) The exposed surface of space heaters used to prevent condensation of moisture during shutdown periods shall not exceed 80 percent of the autoignition temperature in degrees Celsius of the gas or vapor involved when operated at rated voltage, and the maximum space heater surface temperature [based on a 40°C or higher marked ambient] shall be permanently marked on a visible nameplate mounted on the motor. Otherwise, space heaters shall be identified for Class I, Division 2 locations. All motor winding space heaters shall comply with (a), (b) and (c).

(a) Motor winding space heaters shall be de-energized while the motor is energized, and

(b) Motor winding space heaters shall remain de-energized upon motor shutdown for a period of time long enough to ensure the combined surface temperature of the motor windings and energized space heaters will not exceed 80 percent of the autoignition temperature of the gas or vapor involved.

Exception No. 1 to 501.125 (B) (4) (a) and (b): Under engineering supervision, where it has been determined 80 percent of the autoignition temperature of the gas or vapor involved will not be exceeded, the motor and winding space heater may be energized simultaneously and no time delay for winding space heaters energization is required.

Exception No. 2 to 501.125 (B) (4) (a) and (b): Space heaters for auxilary equipment located externally may remain energized simulateously and no time delay for the space heaters are required where the surface temperature of the auxiliary equipment space heaters under any conditions do not exceed 80 percent of the autoignition temperature of the gas or vapor involved.

(c) Motor winding space heater surface temperatures must not exceed 80 percent of the autoignition temperature of the gas or vapor involved based on the maximum rated voltage of the space heaters. This includes installations where the space heaters are connected at a lower voltage.

(5) A sliding contact shaft bonding device used for the purpose of maintaining the rotor at ground potential, shall be permitted where the potential discharge energy is determined to be nonincendive for the application. The shaft bonding device shall be permitted to be installed on the inside or the outside of the motor.

Informational Note No. 1: It is important to consider the temperature of internal and external surfaces that may be exposed to the flammable atmosphere.

Informational Note No. 2: It is important to consider the risk of ignition due to currents arcing across discontinuities and overheating of parts in multisection enclosures of large motors and generators. Such motors and generators may need equipotential bonding jumpers across joints in the enclosure and from enclosure to ground. Where the presence of ignitible gases or vapors is suspected, clean-air purging may be needed immediately prior to and during start-up periods.

Informational Note No. 3: For further information on the application of electric motors in Class I, Division 2 hazardous (classified) locations, see IEEE 1349-2011, *IEEE Guide for the Application of Electric Motors in Class I, Division 2 and Class I, Zone 2 Hazardous (Classified) Locations*.

Informational Note No. 4: Reciprocating engine–driven generators, compressors, and other equipment installed in Class I, Division 2 locations may present a risk of ignition of

flammable materials associated with fuel, starting, compression, and so forth, due to inadvertent release or equipment malfunction by the engine ignition system and controls. For further information on the requirements for ignition systems for reciprocating engines installed in Class I, Division 2 hazardous (classified) locations, see ANSI/UL 122001-2014, *General Requirements for Electrical Ignition Systems for Internal Combustion Engines in Class I, Division 2 or Zone 2, Hazardous (Classified) Locations*.

Informational Note No. 5: For details of the evaluation process to determine incendivity, refer to Annex A and Figure A1 of UL 1836-2014, *Outline of Investigation for Electric Motors and Generators for Use in Class I, Division 2, Class I, Zone 2, Class II, Division 2 and Zone 22 Hazardous (Classified) Locations*.

Statement of Problem and Substantiation for Public Input

Substantiation of new (4)(a): There are motors installed today where the space heaters are not de-energized while the motor is running. This addition would prohibit simultaneous operation of the motor and winding space heaters which could possibly exceed the T-Code of the motor, or 80% of the AIT of the gas or vapor involved, unless it is demonstrated under engineering supervision that this cannot occur.
Substantiation of new (4) (b): Immediately following a motor shutdown, internal motor temperatures are hotter than while running due to lack of ventilation. Even for motors with Class I, Div. 2 nameplates for the motor as described in (4), the motor internals must cool down for a period before the condensation space heaters become energized.
Examples where the exception to (4) (a) or (b) may apply are: 1) a condition where the motor is installed in arctic or chilled environments or, 2) where the AIT of the gas or vapor is extremely high.
Substantiation of new (4) (c): Motor manufacturers should not be allowed to provide space heaters that may be inadvertently connected in the field at a higher rated voltage which could result in exceeding the T-Code of the motor, or 80% of the AIT of the gases or vapors involved.

Submitter Information Verification

Submitter Full Name: Paul Guidry
Organization: Fluor Enterprises, Inc.
Affiliation: Associated Builders and Contractors
Street Address:
City:
State:
Zip:
Submittal Date: Thu Dec 05 19:23:50 EST 2019
Committee: NEC-P14

Committee Statement

Resolution: Motor and heater temperature limits are covered by the existing text in 500.8(D)(1) and 501.125(B)(4).

Public Input No. 2853-NFPA 70-2020 [Section No. 501.125(B)]

(B) Class I, Division 2.

In Class I, Division 2 locations, motors, generators, and other rotating electrical machinery shall comply with (1), (2), or (3). They shall also comply with (4) and (5), if applicable.

(1) Be identified for Class I, Division 2 locations, or

(2) Be identified for Class I, Division 1 locations where sliding contacts, centrifugal or other types of switching mechanism (including motor overcurrent, overloading, and overtemperature devices), or integral resistance devices, either while starting or while running, are employed, or

(3) Be open or nonexplosionproof enclosed motors, such as squirrel-cage induction motors without brushes, switching mechanisms, or similar arc-producing devices that are not identified for use in a Class I, Division 2 location.

(4) The exposed surface of space heaters used to prevent condensation of moisture during shutdown periods shall not exceed 80 percent of the autoignition temperature in degrees Celsius of the gas or vapor involved when operated at rated voltage, and the maximum space heater surface temperature [based on a 40°C or higher marked ambient] shall be permanently marked on a visible nameplate mounted on the motor. Otherwise, space heaters shall be identified for Class I, Division 2 locations.

(5) A sliding contact shaft bonding device used for the purpose of maintaining the rotor at ground potential, shall be permitted where the potential discharge energy is determined to be nonincendive for the application. The shaft bonding device shall be permitted to be installed on the inside or the outside of the motor.

Informational Note No. 1: It is important to consider the temperature of internal and external surfaces that may be exposed to the flammable atmosphere.

Informational Note No. 2: It is important to consider the risk of ignition due to currents arcing across discontinuities and overheating of parts in multisection enclosures of large motors and generators. Such motors and generators may need equipotential bonding jumpers across joints in the enclosure and from enclosure to ground. Where the presence of ignitible gases or vapors is suspected, clean-air purging may be needed immediately prior to and during start-up periods.

Informational Note No. 3: For further information on the application of electric ~~motors~~ - ~~in Class I~~ machines, including shaft bonding devices and discharge energy calculations , in Class I , Division 2 hazardous (classified) locations, ~~see IEEE 1349-2011, *IEEE Guide* for *for* *the Application of Electric Motors in* Class I *Class I* *, Division 2 and* Class I *Class I* *, Zone 2 Hazardous (Classified) Locations*~~ . see IEEE Std 1349-2021, *IEEE Guide for the Application of Electric Machines in Zone 2 and Class I, Division 2 Hazardous (Classified) Locations*

Informational Note No. 4: Reciprocating engine–driven generators, compressors, and other equipment installed in Class I, Division 2 locations may present a risk of ignition of flammable materials associated with fuel, starting, compression, and so forth, due to inadvertent release or equipment malfunction by the engine ignition system and controls. For further information on the requirements for ignition systems for reciprocating engines installed in Class I, Division 2 hazardous (classified) locations, see ANSI/UL 122001-2014, *General Requirements for Electrical Ignition Systems for Internal Combustion Engines in Class I, Division 2 or Zone 2, Hazardous (Classified) Locations*.

Informational Note No. 5: For details of the evaluation process to determine incendivity, refer to Annex A and Figure A1 of UL 1836-2014, *Outline of Investigation for Electric Motors and Generators for Use in Class I, Division 2, Class I, Zone 2, Class II, Division 2 and Zone 22 Hazardous (Classified) Locations*.

Statement of Problem and Substantiation for Public Input

In the 2017 NEC, sliding contact shaft bonding devices were added to 501.125(B)(5). The 2011 edition

of IEEE Std 1349 includes information on shaft bonding devices and includes discharge energy calculations.

In response to industry interest, the 2021 edition has substantially increased information for the application of shaft bonding devices, provides more detailed calculation methods including a graph/table method for capacitive ignition energy, provides a measurement method for determining discharge energy, and adds the IEEE 1349 Discharge Energy Calculator. IEEE Std 1349-2011 is undergoing revision and updating and will be approved in 2021.

Submitter Information Verification

Submitter Full Name: Frederick Bried
Organization:
Affiliation: Self
Street Address:
City:
State:
Zip:
Submittal Date: Wed Sep 02 18:10:52 EDT 2020
Committee: NEC-P14

Committee Statement

Resolution: The referenced standard has not been published.

Public Input No. 1807-NFPA 70-2020 [Section No. 501.130(A)(4)]

(4) Supports.

Boxes, box assemblies, or fittings used for the support of luminaires shall be identified for Class I Division 1 locations.

Statement of Problem and Substantiation for Public Input

The current text requires the boxes and/or fittings to be identified for Class I locations. It does not reference the Division. This requirement is a subdivision of 501.130(A) Class I Division 1. Subdivision 501.10(A)(3) requires all boxes and fittings in Class I Division 1 locations to be approved for Class i Division 1. Adding Division 1 to the text of 501.130(A)(4) adds clarity to the section and erases doubt.

Submitter Information Verification

Submitter Full Name: John Simmons
Organization: Florida East Coast JATC
Street Address:
City:
State:
Zip:
Submittal Date: Tue Jul 07 21:10:47 EDT 2020
Committee: NEC-P14

Committee Statement

Resolution: If not specifically marked, Division 1 is implied. This practice is consistent throughout Article 501 and is permitted by 500.8(C)(2).

Public Input No. 2703-NFPA 70-2020 [Section No. 501.130(B)(4)]

(4) Portable Lighting Equipment.

Portable lighting equipment shall comply with 501.130(B)(~~1~~ 4) (a) or 501 .

~~Exception: Where portable lighting equipment is mounted~~

130(B)(4)(b).

(a) Portable equipment shall comply with 501.130(B)(1)

(b) P ortable lighting equipment mounted on movable stands and

~~is~~

connected by flexible cords,

~~as covered in~~

in accordance with 501.140 ,

~~it~~

shall be permitted to comply with 501.130(B)(1) , where mounted in any position, provided that it

~~also complies with~~

is protected from physical damage in accordance with 501.130(B)(2) .

Statement of Problem and Substantiation for Public Input

The exception is not technically an exception to the requirement found in 501.130. The NEC style manual in section 3.1.4 Exceptions states exceptions to NEC rules shall be used sparingly. The intent is to create text that is written clearly. The PI rewrites the exception as positive language and clearly permits the use 501.130(B)(1) installation methods for portable lighting on stands under certain conditions. The change adds clarity.

Submitter Information Verification

Submitter Full Name: John Simmons
Organization: Florida East Coast JATC
Street Address:
City:
State:
Zip:
Submittal Date: Fri Aug 28 17:26:37 EDT 2020
Committee: NEC-P14

Committee Statement

Resolution: FR-8492-NFPA 70-2021
Statement: The exception has been converted to positive language for compliance with the direction in the NEC Style Manual to minimize the use of exceptions.

Public Input No. 1131-NFPA 70-2020 [Section No. 501.135(B)(1)]

(1) Heaters.

Electrically heated utilization equipment shall conform with either item (1) or item (2):

(1) The heater shall not exceed 80 percent of the ~~autoignition~~ auto ignition temperature in degrees Celsius of the gas or vapor involved on any surface that is exposed to the gas or vapor when continuously energized at the maximum rated ambient temperature. If a temperature controller is not provided, these conditions shall apply when the heater is operated at 120 percent of rated voltage.

Exception No. 1: For motor-mounted ~~anticondensation~~ anti condensation space heaters, see 501.125.

Exception No. 2: Where a current-limiting device is applied to the circuit serving the heater to limit the current in the heater to a value less than that required to raise the heater surface temperature to 80 percent of the ~~autoignition~~ auto ignition temperature.

(2) The heater shall be identified for Class I, Division 1 locations.

Exception to (2): Electrical resistance and skin effect heat tracing identified for Class I, Division 2 locations.

Informational Note No. 1: For further information on electric resistance heat tracing, see ANSI/UL 60079-30-1-2017, *Standard for Explosive Atmospheres — Part 30-1: Electrical Resistance Trace Heating — General and Testing Requirements*.

Informational Note No. 2: For further information on electric skin effect heat tracing, see ~~ANSI/~~ IEEE 844.1/CSA C22.2 No. 293.1-2017, *Standard for Skin Effect Trace Heating of Pipelines, Vessels, Equipment, and Structures — General, Testing, Marking, and Documentation Requirements*.

Informational Note 3: For further information on electric impedance heating *, see IEEE 844.3/CSA C22.2 No.293.3 :2019, Standard for Impedance Heating of Pipelines and Equipment - General, Testing, Marking, and Documentation Requirements.*

Statement of Problem and Substantiation for Public Input

This proposal updates information from industry standards. It makes available the most up-to-date product and marking requirements and provides criteria to determine the suitability when utilized in industrial and commercial applications. The information should help provide electrical, mechanical durability such that in normal use its performance is reliable and poses no danger to the user or surroundings

Submitter Information Verification

Submitter Full Name: Ben Johnson
Organization: [Not Specified]
Affiliation: Thermon
Street Address:
City:
State:
Zip:
Submittal Date: Mon May 18 14:18:46 EDT 2020

Committee: NEC-P14

Committee Statement

Resolution: FR-8493-NFPA 70-2021

Statement: The informational notes have been updated to reflect the current standard and also have been revised for compliance with the NEC Style Manual. The use of the term “autoignition” is in accordance with the NFPA Glossary of Terms.

Public Input No. 1958-NFPA 70-2020 [New Section after 501.140]

501.141 Flexible Cables, Class I, Division 2.

501.141(A) Permitted Uses.

Flexible cable shall be permitted as follows:

- Between one piece of electrical equipment and another piece of electrical equipment by means of a cable assembly involving cable connectors on both ends or a cable connector on one end and a listed fitting on the other, or
- Between a piece of electrical equipment and premises wiring(by means of a cable assembly involvinga cable connector on the equipment end and a listed fitting on the premises wiring end.

501.141(B) Installation.

Where flexible cables are used, the associated cable assemblies shall comply with all of the following:

(1) Permitted terminations are either

(2) cable connectors listed for use in Class I, Division 2 locations and listed for use with the involved cable on both ends, or

(3) a cable connector listed for use in Class I, Division 2 locations and listed for use with the involved cable on one end, and a fitting listed for the type of protection and listed for use with the involved cable on the other end.

Exception No. 1: A Class I, Division 2 listing is not required if the circuit involves only nonincendive field wiring.

Exception No. 2: In industrial establishments where the conditions of maintenance and supervision ensure that only qualified individuals service the installation, the Class I, Division 2 listing is not required when the requirements of 501.141(B) (2), (B)(3), (B)(4), and (B)(5) are satisfied.

(1) Permitted cables are Type P as detailed in 501.10(B)(1), including all construction and installation requirements other than termination means.

(2) Only necessary cable connectors are provided.

(3) Unless the cable connectors are interlocked mechanically or electrically, or otherwise designed so that they cannot be separated when the contacts are energized and the contacts cannot be energized when the plug and socket outlet are separated, a switch complying with 501.105(B)(2) shall be provided so that the cable connectors are not depended on to interrupt current.

Exception: The switch shall not be required if the circuit is nonincendive field wiring.

(1) The fixed equipment and the cable assembly shall both carry a label warning against plugging or unplugging when energized, with both labels as close to the cable connector termination means as possible.

Exception: The labels shall not be required if the circuit is nonincendive field wiring.

Statement of Problem and Substantiation for Public Input

The following provides explanation and background on the proposal…

1. Instead of revising 501.105, which would limit this revision to just Meters, Instruments and Relays, a new 501.141 is being proposed that is not limited by the associated equipment.
2. Scope is only Class I, Division 2 areas, involving only Type P cables based on its flexibility.
3. Instead of using the term “plug and receptacle”, a new term “cable connector” is proposed. This new term is aligned with how unclassified cable assemblies are certified in accordance with the applicable unclassified ANSI standards for field applications.
4. The format / structure of the proposed new 501.141(A) and (B) is based on a combination of 501.140 and 501.105(B)(6), along with 8.8 of UL 121201 / CSA 213.

See also Public Input No. 1959-NFPA 70-2020.

Related Public Inputs for This Document

Related Input	Relationship
Public Input No. 1959-NFPA 70-2020 [New Definition after Definition: Control Drawing.]	
Public Input No. 1959-NFPA 70-2020 [New Definition after Definition: Control Drawing.]	

Submitter Information Verification

Submitter Full Name: Paul Kelly
Organization: UL LLC
Street Address:
City:
State:
Zip:
Submittal Date: Tue Jul 21 20:25:52 EDT 2020
Committee: NEC-P14

Committee Statement

Resolution: FR-9025-NFPA 70-2021

Statement: The first revision provides a new section rather than revising 501.105 which would limit the revision to meters, instruments, and relays. The revision which is limited to Class I, Division 2 locations allows Type P cable to be used where flexibility is needed. A new term, “cable connector” was submitted as a PI for the 2023 NEC revision cycle. The term which is aligned with how unclassified cable assemblies are certified in accordance with applicable unclassified ANSI standards for field wiring is used in this first revision. The format of the new section is based on 501.140, 501.105(B)(6), and 8.8 of UL 121201/CSA 213.

Public Input No. 2919-NFPA 70-2020 [Section No. 501.145]

501.145 Receptacles and Attachment Plugs, Class I, Divisions 1 and 2.

Receptacles and attachment plugs shall be identified for the location.

(A) Receptacles.

Receptacles shall be part of the premises wiring, except as permitted by 501.140(A).

(B) Attachment Plugs.

Attachment plugs shall be of the type providing for connection to the equipment grounding conductor of a permitted flexible cord and shall be identified for the location.

Statement of Problem and Substantiation for Public Input

There should be some text to identify that the receptacles in a Class I location needs to be identified for the location. This text is aready in 502.145 for Class II locations.

Submitter Information Verification

Submitter Full Name: Mike Holt
Organization: Mike Holt Enterprises Inc
Street Address:
City:
State:
Zip:
Submittal Date: Thu Sep 03 09:27:19 EDT 2020
Committee: NEC-P14

Committee Statement

Resolution: FR-8686-NFPA 70-2021
Statement: The requirement for listing of plugs and receptacles has been added to 501.145.

Public Input No. 2511-NFPA 70-2020 [New Section after 502.1]

502.4 Documentation

All areas designated as hazardous (classified) locations shall be properly documented. This documentation shall be available to those authorized to design, install, inspect, maintain, or operate electrical equipment at the location.

Statement of Problem and Substantiation for Public Input

The requirement for documentation is found in 500.4 but the requirement is important enough to be included in each Article; 501, 502, 503, 505, and 506. The requirement should be consistent in all five locations.

Related Public Inputs for This Document

Related Input	Relationship
Public Input No. 2510-NFPA 70-2020 [New Section after 501.1]	
Public Input No. 2513-NFPA 70-2020 [Section No. 505.4]	
Public Input No. 2518-NFPA 70-2020 [New Section after 503.1]	
Public Input No. 2510-NFPA 70-2020 [New Section after 501.1]	
Public Input No. 2513-NFPA 70-2020 [Section No. 505.4]	
Public Input No. 2518-NFPA 70-2020 [New Section after 503.1]	

Submitter Information Verification

Submitter Full Name: John Simmons
Organization: Florida East Coast JATC
Street Address:
City:
State:
Zip:
Submittal Date: Sun Aug 23 17:26:09 EDT 2020
Committee: NEC-P14

Committee Statement

Resolution: The documentation requirements found in 500.4 apply to Articles 501, 502 and 503. They are restated in Articles 505 and 506 as they are not covered by Article 500.

Public Input No. 4420-NFPA 70-2020 [Section No. 502.1]

502.1 Scope.

~~Article~~ ~~502~~ - This article covers the requirements for electrical and electronic equipment and wiring for all voltages in Class II, Division 1 and 2 locations where fire or explosion hazards may exist due to combustible dust.

Statement of Problem and Substantiation for Public Input

Section 4.1.4 of the 2020 NEC(r) Style Manual prohibits references to an entire article, with the exception of Article 100. Changing to "This article" accomplishes the requirement without changing the intent of the Code.

Related Public Inputs for This Document

Related Input	Relationship
Public Input No. 4431-NFPA 70-2020 [Section No. 503.1]	

Submitter Information Verification

Submitter Full Name: Richard Holub
Organization: The DuPont Company, Inc.
Street Address:
City:
State:
Zip:
Submittal Date: Thu Sep 10 12:48:43 EDT 2020
Committee: NEC-P14

Committee Statement

Resolution: FR-8742-NFPA 70-2021
Statement: Statement: Section 4.1.4 of the 2020 NEC Style Manual prohibits references to an entire article, with the exception of Article 100. Changing to "This article" accomplishes the requirement without changing the intent of the Code.

Public Input No. 2499-NFPA 70-2020 [Section No. 502.10(A)(1)]

(1) General.

In Class II, Division 1 locations, the following wiring methods shall be permitted:

(1) Threaded rigid metal conduit (Type RMC) or threaded steel intermediate metal conduit (Type IMC).

(2) Type MI cable with termination fittings listed for the location. Type MI cable shall be installed and supported in a manner to avoid tensile stress at the termination fittings.

(3) In industrial establishments ~~with limited public access, where the conditions of maintenance and supervision ensure that only qualified persons service the installation,~~ Type MC-HL cable, listed for use in Class II, Division 1 locations, with a gas/vaportight continuous corrugated metallic sheath, an overall jacket of suitable polymeric material, a separate equipment grounding conductor(s) in accordance with 250.122, and provided with termination fittings listed for the location, shall be permitted.

(4) Optical fiber cable Types OFNP, OFCP, OFNR, OFCR, OFNG, OFCG, OFN, and OFC shall be permitted to be installed in raceways in accordance with 502.10(A). Optical fiber cables shall be sealed in accordance with 502.15.

(5) In industrial establishments ~~with restricted public access, where the conditions of maintenance and supervision ensure that only qualified persons service the installation,~~ listed Type ITC-HL cable with a gas/vaportight continuous corrugated metallic sheath and an overall jacket of suitable polymeric material, and terminated with fittings listed for the application, and installed in accordance with 727.4.

(6) In industrial establishments ~~with restricted public access, where the conditions of maintenance and supervision ensure that only qualified persons service the installation,~~ for applications limited to 600 volts nominal or less, and where the cable is not subject to physical damage, and terminated with fittings listed for the location, listed Type TC-ER-HL cable. When installed in ladder, ventilated trough, or ventilated channel cable trays, cables shall be installed in a single layer, with a space not less than the larger cable diameter between the two adjacent cables, unless otherwise protected against dust buildup resulting in increased heat, Type TC-ER-HL cable shall be installed in accordance with 336.10.

> Informational Note: See the information on construction, testing, and marking of cables and cable fittings in ANSI/UL 2225-2013, *Cables and Cable-Fittings for Use in Hazardous (Classified) Locations*.

(7) In industrial establishments ~~with restricted public access, where the conditions of maintenance and supervision ensure that only qualified persons service the installation,~~ listed Type P cable with metal braid armor, with an overall jacket, terminated with fittings listed for the location and installed in accordance with 337.10. When installed in ladder, ventilated trough, or ventilated channel cable trays, cables shall be installed in a single layer, with a space not less than the larger cable diameter between the two adjacent cables, unless otherwise protected against dust buildup resulting in increased heat.

> Informational Note No. 1: For information on construction, testing, and marking of Type P cable, see ANSI/UL 1309-2017, *Marine Shipboard Cable*.
>
> Informational Note No. 2: For information on construction, testing, and marking of cable fittings, see ANSI/UL 2225-2013, *Cables and Cable-Fittings for Use in Hazardous (Classified) Locations*.

Statement of Problem and Substantiation for Public Input

The term industrial establishment is used throughout Articles 500 through 506. Where the term is used the following text is added: "restricted access where the conditions of maintenance and engineering supervision ensure that only qualified persons install and service the installation. By creating a definition, the added text can be removed from each location where the term appears. This will remove clutter from the section or subdivision where the term appears which will improve readability.

The proposed definition adds the requirement for the AHJ to approve the building for industrial use. This will help to add some consistency to the use of the less restrictive requirements for industrial establishments.

Related Public Inputs for This Document

Related Input	Relationship
Public Input No. 2494-NFPA 70-2020 [New Definition after Definition: Inherently Safe Optical Ra...]	

Submitter Information Verification

Submitter Full Name: John Simmons
Organization: Florida East Coast JATC
Street Address:
City:
State:
Zip:
Submittal Date: Sun Aug 23 16:08:27 EDT 2020
Committee: NEC-P14

Committee Statement

Resolution: The recommendation is predicated on the inclusion of a new definition of Industrial Establishments in Article 100. This requires action by CMP-1 during the First Draft phase of the revision process. If accepted, comments will be submitted for action during the Second Draft phase of the revision process.

Public Input No. 2739-NFPA 70-2020 [Section No. 502.10(A)(1)]

(1) General.

In Class II, Division 1 locations, the following wiring methods shall be permitted:

(1) Threaded rigid metal conduit (Type RMC) or threaded steel intermediate metal conduit (Type ~~IMC).~~ IMC or reinforced thermosetting resin conduit(RTRC),factory elbows and associated fittings, all marked with the suffix (XW) and listed for the location .) .

(2) Type MI cable with termination fittings listed for the location. Type MI cable shall be installed and supported in a manner to avoid tensile stress at the termination fittings.

(3) In industrial establishments with limited public access, where the conditions of maintenance and supervision ensure that only qualified persons service the installation, Type MC-HL cable, listed for use in Class II, Division 1 locations, with a gas/vaportight continuous corrugated metallic sheath, an overall jacket of suitable polymeric material, a separate equipment grounding conductor(s) in accordance with 250.122, and provided with termination fittings listed for the location, shall be permitted.

(4) Optical fiber cable Types OFNP, OFCP, OFNR, OFCR, OFNG, OFCG, OFN, and OFC shall be permitted to be installed in raceways in accordance with 502.10(A). Optical fiber cables shall be sealed in accordance with 502.15.

(5) In industrial establishments with restricted public access, where the conditions of maintenance and supervision ensure that only qualified persons service the installation, listed Type ITC-HL cable with a gas/vaportight continuous corrugated metallic sheath and an overall jacket of suitable polymeric material, and terminated with fittings listed for the application, and installed in accordance with 727.4.

(6) In industrial establishments with restricted public access, where the conditions of maintenance and supervision ensure that only qualified persons service the installation, for applications limited to 600 volts nominal or less, and where the cable is not subject to physical damage, and terminated with fittings listed for the location, listed Type TC-ER-HL cable. When installed in ladder, ventilated trough, or ventilated channel cable trays, cables shall be installed in a single layer, with a space not less than the larger cable diameter between the two adjacent cables, unless otherwise protected against dust buildup resulting in increased heat, Type TC-ER-HL cable shall be installed in accordance with 336.10.

Informational Note: See the information on construction, testing, and marking of cables and cable fittings in ANSI/UL 2225-2013, *Cables and Cable-Fittings for Use in Hazardous (Classified) Locations*.

(7) In industrial establishments with restricted public access, where the conditions of maintenance and supervision ensure that only qualified persons service the installation, listed Type P cable with metal braid armor, with an overall jacket, terminated with fittings listed for the location and installed in accordance with 337.10. When installed in ladder, ventilated trough, or ventilated channel cable trays, cables shall be installed in a single layer, with a space not less than the larger cable diameter between the two adjacent cables, unless otherwise protected against dust buildup resulting in increased heat.

Informational Note No. 1: For information on construction, testing, and marking of Type P cable, see ANSI/UL 1309-2017, *Marine Shipboard Cable*.

Informational Note No. 2: For information on construction, testing, and marking of cable fittings, see ANSI/UL 2225-2013, *Cables and Cable-Fittings for Use in Hazardous (Classified) Locations*.

Statement of Problem and Substantiation for Public Input

Type RTRC-XW conduit has proven to be effective when used in Division 2 locations. It is anticipated that the conduit and fittings will be listed as explosionproof. UL 1203 covers non-metal explosionproof electrical enclosures.

Submitter Information Verification

Submitter Full Name: Tom Guida
Organization: Tjg Services Inc
Affiliation: Champion Fiberglass Inc.
Street Address:
City:
State:
Zip:
Submittal Date: Sun Aug 30 11:17:18 EDT 2020
Committee: NEC-P14

Committee Statement

Resolution: RTRC conduit has not been listed for the application. The product is not listed for use in Class II Division 1 locations and there was no substantiation to show that the product and its fittings will be listed as dusttight. The statement that RTRC-XW “has proven effective in Division 2 locations” is deemed insufficient (in itself) as justification for addition in Division 1. Additional testing results and specific performance requirements/limitations based on the requirements for nonmetallic explosionproof electrical enclosures in UL 1203 are needed. In addition, information on the availability of sealing fittings listed for use with RTRC-XW is also necessary for CMP-14 to consider adding this wiring method to 501.10 (A). If a transition to a metal seal fitting is required, a corresponding requirement to bond the metal portion of the system would need to be added in the relevant sections of the Code.

Public Input No. 1369-NFPA 70-2020 [Section No. 502.10(A)(2)]

(2) Flexible Connections.

Where necessary to employ flexible connections, one or more of the following shall also be permitted:

(1) Dusttight flexible connectors.

(2) Liquidtight flexible metal conduit (Type LFMC) with listed fittings.

(3) Liquidtight flexible nonmetallic conduit (Type LFNC) with listed fittings.

(4) Interlocked armor Type MC cable having an overall jacket of suitable polymeric material and provided with termination fittings listed for Class II, Division 1 locations.

(5) Flexible cord listed for extra-hard usage and terminated with listed dusttight cord connectors. Where flexible cords are used, they shall comply with 502.140.

(6) For elevator use, an identified elevator cable of Type EO, ETP, or ETT, shown under the "use" column in Table 400.4 for "hazardous (classified) locations" and terminated with listed dusttight fittings.

Informational Note: See 502.30(B) for the equipment grounding conductor requirements where flexible conduit is used.

(7) In industrial establishments with restricted public access, where the conditions of maintenance and supervision ensure that only qualified persons service the installation, for applications limited to 600 volts nominal or less, and where the cable is not subject to physical damage, and terminated with fittings listed for the location, listed Type TC-ER-HL cable. Type TC-ER-HL cable shall be installed in accordance with 336.10.

Informational Note: See the information on construction, testing, and marking of cables and cable fittings in ANSI/UL 2225-2013, *Cables and Cable-Fittings for Use in Hazardous (Classified) Locations*.

(8) In industrial establishments with restricted public access, where the conditions of maintenance and supervision ensure that only qualified persons service the installation, listed Type P cable with metal braid armor, with an overall jacket, terminated with fittings listed for the location, and installed in accordance with 337.10.

Informational Note No. 1: For information on construction, testing, and marking of Type P cable, see ANSI/UL 1309-2017, *Marine Shipboard Cable*.

Informational Note No. 2: For information on construction, testing, and marking of cable fittings, see ANSI/UL 2225-2013, *Cables and Cable-Fittings for Use in Hazardous (Classified) Locations*.

Statement of Problem and Substantiation for Public Input

Text revised to make it clear that we the rule is about the required equipment grounding conductor, not 'grounding.'

Submitter Information Verification

Submitter Full Name: Mike Holt
Organization: Mike Holt Enterprises Inc
Street Address:
City:

State:

Zip:

Submittal Date: Mon Jun 01 19:58:35 EDT 2020

Committee: NEC-P14

Committee Statement

Resolution: FR-8409-NFPA 70-2021

Statement: The recommendations correctly updates the standard for Type P cable. The format of the sentence was revised to comply with Section 3.1.3.1 of the NEC Style Manual. The title of the standard is revised to match the title of 1309A shown on the UL standards webpage. The informational note to (6) has been converted into positive text and is now part of (2).

Public Input No. 1983-NFPA 70-2020 [Section No. 502.10(A)(2)]

(2) Flexible Connections.

Where necessary to employ flexible connections, one or more of the following shall also be permitted:

(1) Dusttight flexible connectors.

(2) Liquidtight flexible metal conduit (Type LFMC) with listed fittings and bonded per 502 .30(B).

(3) Liquidtight flexible nonmetallic conduit (Type LFNC) with listed fittings.

(4) Interlocked armor Type MC cable having an overall jacket of suitable polymeric material and provided with termination fittings listed for Class II, Division 1 locations.

(5) Flexible cord listed for extra-hard usage and terminated with listed dusttight cord connectors. Where flexible cords are used, they shall comply with 502.140.

(6) For elevator use, an identified elevator cable of Type EO, ETP, or ETT, shown under the "use" column in Table 400.4 for "hazardous (classified) locations" and terminated with listed dusttight fittings.

~~Informational Note: See 502.30(B) for grounding requirements where flexible conduit is used.~~

(7) In industrial establishments with restricted public access, where the conditions of maintenance and supervision ensure that only qualified persons service the installation, for applications limited to 600 volts nominal or less, and where the cable is not subject to physical damage, and terminated with fittings listed for the location, listed Type TC-ER-HL cable. Type TC-ER-HL cable shall be installed in accordance with 336.10 .

Informational Note: See the information on construction, testing, and marking of cables and cable fittings in ANSI/UL 2225-2013, *Cables and Cable-Fittings for Use in Hazardous (Classified) Locations* .

(8) In industrial establishments with restricted public access, where the conditions of maintenance and supervision ensure that only qualified persons service the installation, listed Type P cable with metal braid armor, with an overall jacket, terminated with fittings listed for the location, and installed in accordance with 337.10 .

Informational Note No. 1: For information on construction, testing, and marking of Type P cable, see ANSI/UL 1309-2017, *Marine Shipboard Cable* .

Informational Note No. 2: For information on construction, testing, and marking of cable fittings, see ANSI/UL 2225-2013, *Cables and Cable-Fittings for Use in Hazardous (Classified) Locations* .

Statement of Problem and Substantiation for Public Input

The informational note refers the reader to 502.30(B) for grounding for flexible metal conduit is used. The note is under list item 6 elevator cable. Informational notes are required to be placed directly under the rule they apply to. Additionally, 502.30(B) provides bonding requirements for liquidtight flexible metal conduit and not grounding requirements. Moving the note to list item 2 puts the reference to the bonding requirement where it belongs (LFMC) and turns the note into code text.

Related Public Inputs for This Document

Related Input	Relationship
Public Input No. 1984-NFPA 70-2020 [Section No. 501.10(B)(2)]	
Public Input No. 1982-NFPA 70-2020 [Section No. 503.10(A)(3)]	
Public Input No. 1982-NFPA 70-2020 [Section No. 503.10(A)(3)]	
Public Input No. 1984-NFPA 70-2020 [Section No. 501.10(B)(2)]	

Submitter Information Verification

Submitter Full Name: John Simmons
Organization: Florida East Coast JATC
Street Address:
City:
State:
Zip:
Submittal Date: Wed Jul 22 18:18:06 EDT 2020
Committee: NEC-P14

Committee Statement

Resolution: FR-8409-NFPA 70-2021

Statement: The recommendations correctly updates the standard for Type P cable. The format of the sentence was revised to comply with Section 3.1.3.1 of the NEC Style Manual. The title of the standard is revised to match the title of 1309A shown on the UL standards webpage. The informational note to (6) has been converted into positive text and is now part of (2).

Public Input No. 2500-NFPA 70-2020 [Section No. 502.10(A)(2)]

(2) Flexible Connections.

Where necessary to employ flexible connections, one or more of the following shall also be permitted:

(1) Dusttight flexible connectors.

(2) Liquidtight flexible metal conduit (Type LFMC) with listed fittings.

(3) Liquidtight flexible nonmetallic conduit (Type LFNC) with listed fittings.

(4) Interlocked armor Type MC cable having an overall jacket of suitable polymeric material and provided with termination fittings listed for Class II, Division 1 locations.

(5) Flexible cord listed for extra-hard usage and terminated with listed dusttight cord connectors. Where flexible cords are used, they shall comply with 502.140.

(6) For elevator use, an identified elevator cable of Type EO, ETP, or ETT, shown under the "use" column in Table 400.4 for "hazardous (classified) locations" and terminated with listed dusttight fittings.

Informational Note: See 502.30(B) for grounding requirements where flexible conduit is used.

(7) In industrial establishments ~~with restricted public access, where the conditions of maintenance and supervision ensure that only qualified persons service the installation,~~ for applications limited to 600 volts nominal or less, and where the cable is not subject to physical damage, and terminated with fittings listed for the location, listed Type TC-ER-HL cable. Type TC-ER-HL cable shall be installed in accordance with 336.10.

Informational Note: See the information on construction, testing, and marking of cables and cable fittings in ANSI/UL 2225-2013, *Cables and Cable-Fittings for Use in Hazardous (Classified) Locations*.

(8) In industrial establishments ~~with restricted public access, where the conditions of maintenance and supervision ensure that only qualified persons service the installation,~~ listed Type P cable with metal braid armor, with an overall jacket, terminated with fittings listed for the location, and installed in accordance with 337.10.

Informational Note No. 1: For information on construction, testing, and marking of Type P cable, see ANSI/UL 1309-2017, *Marine Shipboard Cable*.

Informational Note No. 2: For information on construction, testing, and marking of cable fittings, see ANSI/UL 2225-2013, *Cables and Cable-Fittings for Use in Hazardous (Classified) Locations*.

Statement of Problem and Substantiation for Public Input

The term industrial establishment is used throughout Articles 500 through 506. Where the term is used the following text is added: "restricted access where the conditions of maintenance and engineering supervision ensure that only qualified persons install and service the installation. By creating a definition, the added text can be removed from each location where the term appears. This will remove clutter from the section or subdivision where the term appears which will improve readability.

The proposed definition adds the requirement for the AHJ to approve the building for industrial use. This will help to add some consistency to the use of the less restrictive requirements for industrial establishments.

Related Public Inputs for This Document

Related Input	Relationship
Public Input No. 2494-NFPA 70-2020 [New Definition after Definition: Inherently Safe Optical Ra...]	

Submitter Information Verification

Submitter Full Name: John Simmons
Organization: Florida East Coast JATC
Street Address:
City:
State:
Zip:
Submittal Date: Sun Aug 23 16:10:27 EDT 2020
Committee: NEC-P14

Committee Statement

Resolution: The recommendation is predicated on the inclusion of a new definition of Industrial Establishments in Article 100. This requires action by CMP-1 during the First Draft phase of the revision process. If accepted, comments will be submitted for action during the Second Draft phase of the revision process.

Public Input No. 2525-NFPA 70-2020 [Section No. 502.10(A)(2)]

(2) Flexible Connections.

Where necessary to employ flexible connections, one or more of the following shall also be permitted:

(1) Dusttight flexible connectors.

(2) Liquidtight flexible metal conduit (Type LFMC) with listed fittings and bonded per 502 .30(B).

(3) Liquidtight flexible nonmetallic conduit (Type LFNC) with listed fittings.

(4) Interlocked armor Type MC cable having an overall jacket of suitable polymeric material and provided with termination fittings listed for Class II, Division 1 locations.

(5) Flexible cord listed for extra-hard usage and terminated with listed dusttight cord connectors. Where flexible cords are used, they shall comply with 502.140.

(6) For elevator use, an identified elevator cable of Type EO, ETP, or ETT, shown under the "use" column in Table 400.4 for "hazardous (classified) locations" and terminated with listed dusttight fittings.

~~Informational Note: See 502.30(B) for grounding requirements where flexible conduit is used.~~

(7) In industrial establishments with restricted public access, where the conditions of maintenance and supervision ensure that only qualified persons service the installation, for applications limited to 600 volts nominal or less, and where the cable is not subject to physical damage, and terminated with fittings listed for the location, listed Type TC-ER-HL cable. Type TC-ER-HL cable shall be installed in accordance with 336.10 .

Informational Note: See the information on construction, testing, and marking of cables and cable fittings in ANSI/UL 2225-2013, *Cables and Cable-Fittings for Use in Hazardous (Classified) Locations* .

(8) In industrial establishments with restricted public access, where the conditions of maintenance and supervision ensure that only qualified persons service the installation, listed Type P cable with metal braid armor, with an overall jacket, terminated with fittings listed for the location, and installed in accordance with 337.10 .

Informational Note No. 1: For information on construction, testing, and marking of Type P cable, see ANSI/UL 1309-2017, *Marine Shipboard Cable* .

Informational Note No. 2: For information on construction, testing, and marking of cable fittings, see ANSI/UL 2225-2013, *Cables and Cable-Fittings for Use in Hazardous (Classified) Locations* .

Statement of Problem and Substantiation for Public Input

The informational note refers the reader to 502.30(B) for grounding for flexible metal conduit is used. The note is under list item 6. Informational notes are required to be placed directly under the rule they apply to. Additionally 502.30(B) provides bonding requirements for liquidtight flexible metal conduit and not grounding requirements. The PI changes the note to positive text for item 3 liquidtight flexible metal conduit.

Submitter Information Verification

Submitter Full Name: John Simmons
Organization: Florida East Coast JATC
Street Address:
City:
State:
Zip:
Submittal Date: Sun Aug 23 21:32:42 EDT 2020
Committee: NEC-P14

Committee Statement

Resolution: FR-8409-NFPA 70-2021

Statement: The recommendations correctly updates the standard for Type P cable. The format of the sentence was revised to comply with Section 3.1.3.1 of the NEC Style Manual. The title of the standard is revised to match the title of 1309A shown on the UL standards webpage. The informational note to (6) has been converted into positive text and is now part of (2).

Public Input No. 2547-NFPA 70-2020 [Section No. 502.10(A)(2)]

(2) Flexible Connections.

Where necessary to employ flexible connections, one or more of the following shall also be permitted:

(1) Dusttight flexible connectors.

(2) Liquidtight flexible metal conduit (Type LFMC) with listed fittings.

(3) Liquidtight flexible nonmetallic conduit (Type LFNC) with listed fittings.

(4) Interlocked armor Type MC cable having an overall jacket of suitable polymeric material and provided with termination fittings listed for Class II, Division 1 locations.

(5) Flexible cord listed for extra-hard usage and terminated with listed dusttight cord connectors. Where flexible cords are used, they shall comply with 502.140.

(6) For elevator use, an identified elevator cable of Type EO, ETP, or ETT, shown under the "use" column in Table 400.4 for "hazardous (classified) locations" and terminated with listed dusttight fittings.

Informational Note: See 502.30(B) for grounding requirements where flexible conduit is used.

(7) In industrial establishments with restricted public access, where the conditions of maintenance and supervision ensure that only qualified persons service the installation, for applications limited to 600 volts nominal or less, and where the cable is not subject to physical damage, and terminated with fittings listed for the location, listed Type TC-ER-HL cable. Type TC-ER-HL cable shall be installed in accordance with 336.10.

Informational Note: See the information on construction, testing, and marking of cables and cable fittings in ANSI/UL 2225-2013, *Cables and Cable-Fittings for Use in Hazardous (Classified) Locations*.

(8) In industrial establishments with restricted public access, where the conditions of maintenance and supervision ensure that only qualified persons service the installation, listed Type P cable with metal braid armor, with an overall jacket, terminated with fittings listed for the location, and installed in accordance with 337.10.

Informational Note No. 1: For information on construction, testing, and marking of Type P cable, see ~~ANSI/~~ UL ~~1309-2017~~ 1309A , ~~*Marine Shipboard*~~ *Cable for use in Mobile Installations* .

Informational Note No. 2: For information on construction, testing, and marking of cable fittings, see ANSI/UL 2225-2013, *Cables and Cable-Fittings for Use in Hazardous (Classified) Locations*.

Statement of Problem and Substantiation for Public Input

The requirements for Type P cables are now contained in UL 1309A, Cable for use in Mobile Installations. The following informational notes in the code that reference UL1309 have been updated to the correct UL1309A standard containing these requirements.

Related Public Inputs for This Document

Related Input	Relationship
Public Input No. 2544-NFPA 70-2020 [Section No. 501.10(A)(1)]	Companion

Public Input No. 2545-NFPA 70-2020 [Section No. 501.10(A)(2)]	Companion
Public Input No. 2546-NFPA 70-2020 [Section No. 501.10(B)(1)]	Companion
Public Input No. 2548-NFPA 70-2020 [Section No. 502.10(A)(2)]	Companion
Public Input No. 2549-NFPA 70-2020 [Section No. 502.10(B)(1)]	Companion
Public Input No. 2550-NFPA 70-2020 [Section No. 505.15(B)(1)]	Companion
Public Input No. 2551-NFPA 70-2020 [Section No. 505.15(B)(2)]	Companion
Public Input No. 2552-NFPA 70-2020 [Section No. 505.15(C)(1)]	Companion
Public Input No. 2544-NFPA 70-2020 [Section No. 501.10(A)(1)]	
Public Input No. 2545-NFPA 70-2020 [Section No. 501.10(A)(2)]	
Public Input No. 2546-NFPA 70-2020 [Section No. 501.10(B)(1)]	
Public Input No. 2548-NFPA 70-2020 [Section No. 502.10(A)(2)]	
Public Input No. 2549-NFPA 70-2020 [Section No. 502.10(B)(1)]	
Public Input No. 2550-NFPA 70-2020 [Section No. 505.15(B)(1)]	
Public Input No. 2551-NFPA 70-2020 [Section No. 505.15(B)(2)]	
Public Input No. 2552-NFPA 70-2020 [Section No. 505.15(C)(1)]	

Submitter Information Verification

Submitter Full Name: Paul Knapp
Organization: UL LLC
Street Address:
City:
State:
Zip:
Submittal Date: Mon Aug 24 14:05:34 EDT 2020
Committee: NEC-P14

Committee Statement

Resolution: FR-8409-NFPA 70-2021

Statement: The recommendations correctly updates the standard for Type P cable. The format of the sentence was revised to comply with Section 3.1.3.1 of the NEC Style Manual. The title of the standard is revised to match the title of 1309A shown on the UL standards webpage. The informational note to (6) has been converted into positive text and is now part of (2).

Public Input No. 2548-NFPA 70-2020 [Section No. 502.10(A)(2)]

(2) Flexible Connections.

Where necessary to employ flexible connections, one or more of the following shall also be permitted:

(1) Dusttight flexible connectors.

(2) Liquidtight flexible metal conduit (Type LFMC) with listed fittings.

(3) Liquidtight flexible nonmetallic conduit (Type LFNC) with listed fittings.

(4) Interlocked armor Type MC cable having an overall jacket of suitable polymeric material and provided with termination fittings listed for Class II, Division 1 locations.

(5) Flexible cord listed for extra-hard usage and terminated with listed dusttight cord connectors. Where flexible cords are used, they shall comply with 502.140.

(6) For elevator use, an identified elevator cable of Type EO, ETP, or ETT, shown under the "use" column in Table 400.4 for "hazardous (classified) locations" and terminated with listed dusttight fittings.

Informational Note: See 502.30(B) for grounding requirements where flexible conduit is used.

(7) In industrial establishments with restricted public access, where the conditions of maintenance and supervision ensure that only qualified persons service the installation, for applications limited to 600 volts nominal or less, and where the cable is not subject to physical damage, and terminated with fittings listed for the location, listed Type TC-ER-HL cable. Type TC-ER-HL cable shall be installed in accordance with 336.10.

Informational Note: See the information on construction, testing, and marking of cables and cable fittings in ANSI/UL 2225-2013, *Cables and Cable-Fittings for Use in Hazardous (Classified) Locations*.

(8) In industrial establishments with restricted public access, where the conditions of maintenance and supervision ensure that only qualified persons service the installation, listed Type P cable with metal braid armor, with an overall jacket, terminated with fittings listed for the location, and installed in accordance with 337.10.

Informational Note No. 1: For information on construction, testing, and marking of Type P cable, see ~~ANSI/~~ UL ~~1309-2017~~ 1309A , ~~*Marine Shipboard*~~ *Cable for use in Mobile Installations* .

Informational Note No. 2: For information on construction, testing, and marking of cable fittings, see ANSI/UL 2225-2013, *Cables and Cable-Fittings for Use in Hazardous (Classified) Locations*.

Statement of Problem and Substantiation for Public Input

The requirements for Type P cables are now contained in UL 1309A, Cable for use in Mobile Installations. The following informational notes in the code that reference UL1309 have been updated to the correct UL1309A standard containing these requirements.

Related Public Inputs for This Document

Related Input	Relationship
Public Input No. 2544-NFPA 70-2020 [Section No. 501.10(A)(1)]	Companion

Public Input No. 2545-NFPA 70-2020 [Section No. 501.10(A)(2)]	Companion
Public Input No. 2546-NFPA 70-2020 [Section No. 501.10(B)(1)]	Companion
Public Input No. 2547-NFPA 70-2020 [Section No. 502.10(A)(2)]	Companion
Public Input No. 2549-NFPA 70-2020 [Section No. 502.10(B)(1)]	Companion
Public Input No. 2550-NFPA 70-2020 [Section No. 505.15(B)(1)]	Companion
Public Input No. 2551-NFPA 70-2020 [Section No. 505.15(B)(2)]	Companion
Public Input No. 2552-NFPA 70-2020 [Section No. 505.15(C)(1)]	Companion
Public Input No. 2544-NFPA 70-2020 [Section No. 501.10(A)(1)]	
Public Input No. 2545-NFPA 70-2020 [Section No. 501.10(A)(2)]	
Public Input No. 2546-NFPA 70-2020 [Section No. 501.10(B)(1)]	
Public Input No. 2547-NFPA 70-2020 [Section No. 502.10(A)(2)]	
Public Input No. 2549-NFPA 70-2020 [Section No. 502.10(B)(1)]	
Public Input No. 2550-NFPA 70-2020 [Section No. 505.15(B)(1)]	
Public Input No. 2551-NFPA 70-2020 [Section No. 505.15(B)(2)]	
Public Input No. 2552-NFPA 70-2020 [Section No. 505.15(C)(1)]	

Submitter Information Verification

Submitter Full Name: Paul Knapp
Organization: UL LLC
Street Address:
City:
State:
Zip:
Submittal Date: Mon Aug 24 14:07:47 EDT 2020
Committee: NEC-P14

Committee Statement

Resolution: FR-8409-NFPA 70-2021

Statement: The recommendations correctly updates the standard for Type P cable. The format of the sentence was revised to comply with Section 3.1.3.1 of the NEC Style Manual. The title of the standard is revised to match the title of 1309A shown on the UL standards webpage. The informational note to (6) has been converted into positive text and is now part of (2).

Public Input No. 2923-NFPA 70-2020 [Section No. 502.10(A)(3)]

(3) Boxes and Fittings.

Boxes and fittings shall be provided with threaded bosses for connection to conduit or cable terminations and shall be dusttight. Boxes and fittings in which taps, joints, or terminal connections are made, or that are used in Group E locations, shall be identified for Class II locations.

Informational Note No.1 : For entry into enclosures required to be dust-ignitionproof, see the information on construction, testing, and marking of cables, dust-ignitionproof cable fittings, and dust-ignitionproof cord connectors in ANSI/UL 2225-2013, *Cables and Cable-Fittings for Use in Hazardous (Classified) Locations*.

Informational Note No. 2: Enclosure Types 3, 3S, 3SX, 4, 4X, 5, 6, 6P, 12, 12K, and 13, per ANSI/NEMA 250-2014, Enclosures for Electrical Equipment, are considered dusttight and suitable for use in unclassified locations and in Class II, Division 2; Class III; and Zone 22 hazardous (classified) locations.

Statement of Problem and Substantiation for Public Input

I suggest the panel add Informational Note No. 2 to help the reader understand what products would be sutiable. This note was extracted from the definition of dusttight from Article 100.

Submitter Information Verification

Submitter Full Name: Mike Holt
Organization: Mike Holt Enterprises Inc
Street Address:
City:
State:
Zip:
Submittal Date: Thu Sep 03 09:31:40 EDT 2020
Committee: NEC-P14

Committee Statement

Resolution: Proposed Informational Note No. 2 does not meet the intent of 3.1.3 of the NEC Style Manual. The reference to enclosure types does not support or improve usability of the requirement in this section. Additionally, this information is found in Table 110.28 with greater detail. The second sentence states that all equipment enclosures are dusttight which is not a true statement. The sentence does not provide information that supports or improves the requirement.

Public Input No. 2961-NFPA 70-2020 [Section No. 502.10(A)(3)]

(3) Boxes and Fittings.

Boxes, fittings and ~~fittings~~ cord connectors shall be provided with threaded bosses for connection to conduit or cable terminations and shall be dusttight. Boxes, fittings and ~~fittings~~ cord connectors in which taps, joints, or terminal connections are made, or that are used in Group E locations, shall be identified for Class II locations.

Informational Note No. 1 : For entry into enclosures required to be dust-ignitionproof, see the information on construction, testing, and marking of cables, dust-ignitionproof cable fittings, and dust-ignitionproof cord connectors in ANSI/UL 2225-2013, *Cables and Cable-Fittings for Use in Hazardous (Classified) Locations*. All boxes, fittings and cord connectors shall be approved for Class I, Division 1.

Informational Note No. 2: For entry into enclosures required to be dust-ignitionproof, see the information on construction, testing, and marking of dust-ignitionproof conduit fittings in ANSI/UL 1203-2015, Explosion-Proof and Dust-Ignition-Proof Electrical Equipment for Use in Hazardous (Classified) Locations.

Statement of Problem and Substantiation for Public Input

Section 502.10(A)(3) is relevant to Section 502.10(A)(1) which permits conduit. "Conduit connectors" was added ti the charging text to correlate with the inclusion in Informational Note No.1.

Submitter Information Verification

Submitter Full Name: Megan Hayes
Organization: Nema
Street Address:
City:
State:
Zip:
Submittal Date: Thu Sep 03 14:01:56 EDT 2020
Committee: NEC-P14

Committee Statement

Resolution: The recommended text adds cord connectors to boxes and fittings. CMP-14 notes that a cord connector is a fitting and believes it should not be singled out. The proposed sentence added to the informational note is a violation of 3.1.3 of the NEC Style Manual which prohibits mandatory language in informational notes. The current requirement is correct as written. It also would require the dusttight boxes and fitiings to be approved for Class I Division 1 (502.10(A)(3) applies to Class II Division 1). The proposed Informational Note No. 2 does not meet the requirements of 3.1.3 of the NEC Style Manual. Informational notes are to be used only to support or improve usability of the associated requirement. Section 502.10(A)(3) requires boxes and fittings to be dusttight. The Informational Note refers to ANSI/UL 1203 which provides information on explosionproof and dust-ignitionproof equipment. There is no relationship between the requirement and the informational note.

Public Input No. 1297-NFPA 70-2020 [Section No. 502.10(B)]

(B) Class II, Division 2.

(1) General.

In Class II, Division 2 locations, the following wiring methods shall be permitted:

(1) All wiring methods permitted in 502.10(A).

(2) Rigid metal conduit (Type RMC), intermediate metal conduit (Type IMC), PVC Coated RMC, and PVC Coated IMC with listed ~~threaded or threadless~~ fittings.

(3) Electrical metallic tubing (Type EMT) or dusttight wireways.

(4) Type MC, MV, TC, or TC-ER cable, including installation in cable tray systems. Type TC-ER cable shall include an equipment grounding conductor in addition to a drain wire that might be present. The cable shall be terminated with listed fittings.

(5) Types PLTC and PLTC-ER cable in accordance with Part II or III of Article 725, including installation in cable tray systems. The cable shall be terminated with listed fittings. Type PLTC-ER cable shall include an equipment grounding conductor in addition to a drain wire that might be present.

(6) Types ITC and ITC-ER cable as permitted in 727.4 and terminated with listed fittings. Type ITC-ER cable shall include an equipment grounding conductor in addition to a drain wire.

(7) ~~Where metal conduit~~ In industrial establishments with restricted public access, where the conditions of maintenance and supervision ensure that only qualified persons service the installation and where wiring methods in 502.10(B)(1)(2) will not provide sufficient corrosion resistance, any of the following shall be permitted: ~~In industrial establishments with restricted public access, where the conditions of maintenance and supervision ensure that only qualified persons service the installation,~~

(8) Listed reinforced thermosetting resin conduit (RTRC), factory elbows, and associated fittings, all marked with suffix -XW

(9) ~~PVC-coated rigid metal conduit (RMC), factory elbows, and associated fittings~~

(10) ~~PVC-coated intermediate metal conduit (IMC), factory elbows, and associated fittings~~

a. Schedule 80 PVC conduit, factory elbows, and associated fittings

(11) Optical fiber cable Types OFNP, OFCP, OFNR, OFCR, OFNG, OFCG, OFN, and OFC shall be permitted to be installed in cable trays or any other raceway in accordance with 502.10(B). Optical fiber cables shall be sealed in accordance with 502.15.

(12) Cablebus.

(13) In industrial establishments with restricted public access, where the conditions of maintenance and supervision ensure that only qualified persons service the installation, listed Type P cable with or without metal braid armor, with an overall jacket, terminated with listed fittings, and installed in accordance with 337.10.

Informational Note: For information on construction, testing, and marking of Type P cable, see ANSI/UL 1309-2017, *Marine Shipboard Cable*.

(2) Flexible Connections.

Where provision must be made for flexibility, 502.10(A)(2) shall apply.

(3) Nonincendive Field Wiring.

Nonincendive field wiring shall be permitted using any of the wiring methods permitted for unclassified locations. Nonincendive field wiring systems shall be installed in accordance with the control drawing(s). Simple apparatus, not shown on the control drawing, shall be permitted in a nonincendive field wiring circuit, provided the simple apparatus does not interconnect the nonincendive field wiring circuit to any other circuit.

Informational Note: Simple apparatus is defined in Article 100 Part III.

Separate nonincendive field wiring circuits shall be installed in accordance with one of the following:

(1) In separate cables

(2) In multiconductor cables where the conductors of each circuit are within a grounded metal shield

(3) In multiconductor cables or in raceways where the conductors of each circuit have insulation with a minimum thickness of 0.25 mm (0.01 in.)

(4) Boxes and Fittings.

All boxes and fittings shall be dusttight.

Statement of Problem and Substantiation for Public Input

Revise 502.10(B)(1) to clarify that in Class II, Division 2 Locations metal conduit includes PVC coated conduit and return the language regarding industrial establishments as previously described in 2017 NEC where RTRC can only be used in industrial establishments with given criteria. No substantiation was provided to remove this language in 2020 NEC.

Fittings can only be threaded or threadless – so the words are not needed. The product labeling on the pvc coated conduit will guide the user for use with threaded fittings only. Keeping these words in the NEC while adding in the PVC Coated style RMC creates a conflict.

Submitter Information Verification

Submitter Full Name: Megan Hayes
Organization: Nema
Street Address:
City:
State:
Zip:
Submittal Date: Thu May 28 12:18:22 EDT 2020
Committee: NEC-P14

Committee Statement

Resolution: FR-8398-NFPA 70-2021

Statement: The revision adds text to (2) to clarify that PVC coated metal conduits are permitted for general applications where increased levels of corrosion protection are not required. It is necessary to retain threaded and threadless in respect to fittings for clarity. The revision to (3) clarifies that compression fittings are permitted for use with EMT in Class II, Division 2 locations. The revision to the informational note updates the referenced standard and addresses Style Manual requirements. CMP-14 reaffirms the use of RTRC conduit should not be limited to only industrial establishments. Items 7(b) and (c) are retained for clarity.

Public Input No. 179-NFPA 70-2019 [Section No. 502.10(B)(1)]

(1) General.

In Class II, Division 2 locations, the following wiring methods shall be permitted:

(1) All wiring methods permitted in 502.10(A).

(2) Rigid metal conduit (Type RMC), intermediate metal conduit (Type IMC), with listed threaded or threadless fittings.

(3) Electrical metallic tubing (Type EMT) or dusttight wireways.

(4) Type MC, MV, TC, or TC-ER cable, including installation in cable tray systems. Type TC-ER cable shall include an equipment grounding conductor in addition to a drain wire that might be present. The cable shall be terminated with listed fittings.

(5) Types PLTC and PLTC-ER cable in accordance with Part II or III of Article 725, including installation in cable tray systems. The cable shall be terminated with listed fittings. Type PLTC-ER cable shall include an equipment grounding conductor in addition to a drain wire that might be present.

(6) Types ITC and ITC-ER cable as permitted in 727.4 and terminated with listed fittings. Type ITC-ER cable shall include an equipment grounding conductor in addition to a drain wire.

(7) Where metal conduit will not provide sufficient corrosion resistance, any of the following shall be permitted:

~~Listed~~

a. In industrial establishments with restricted public access, where the conditions of maintenance and supervision ensure that only qualified persons service the installation, reinforced thermosetting resin conduit (RTRC), factory elbows, and associated fittings, all marked with suffix -XW

b. PVC-coated rigid metal conduit (RMC), factory elbows, and associated fittings

c. PVC-coated intermediate metal conduit (IMC), factory elbows, and associated fittings

d. In industrial establishments with restricted public access, where the conditions of maintenance and supervision ensure that only qualified persons service the installation, Schedule 80 PVC conduit, factory elbows, and associated fittings

(8) Optical fiber cable Types OFNP, OFCP, OFNR, OFCR, OFNG, OFCG, OFN, and OFC shall be permitted to be installed in cable trays or any other raceway in accordance with 502.10(B). Optical fiber cables shall be sealed in accordance with 502.15.

(9) Cablebus.

(10) In industrial establishments with restricted public access, where the conditions of maintenance and supervision ensure that only qualified persons service the installation, listed Type P cable with or without metal braid armor, with an overall jacket, terminated with listed fittings, and installed in accordance with 337.10.

Informational Note: For information on construction, testing, and marking of Type P cable, see ANSI/UL 1309-2017, *Marine Shipboard Cable*.

Statement of Problem and Substantiation for Public Input

This Public Input only pertains to 502.10(B)(1)(7)a. Terra automatically underline the whole section.

"Listed" was deleted since 355.6 requires all RTRC and fittings to be listed. The requirements for "industrial establishments" was added.

The 2014 NEC allowed RTRC-XW to be used only when installed in industrial establishments where supervised and maintenance was present. The 2017 removed this restriction without technical substantiation. This Public Input revises the section to reinstate the requirement.

Submitter Information Verification

Submitter Full Name: David Kendall
Organization: ABB, Inc.
Street Address:
City:
State:
Zip:
Submittal Date: Tue Dec 10 09:47:56 EST 2019
Committee: NEC-P14

Committee Statement

Resolution: The current language in the requirement section correctly states the intended requirements. The term listed is used throughout Articles 500 through 516 to reaffirm that requirement.

Public Input No. 2502-NFPA 70-2020 [Section No. 502.10(B)(1)]

(1) General.

In Class II, Division 2 locations, the following wiring methods shall be permitted:

(1) All wiring methods permitted in 502.10(A).

(2) Rigid metal conduit (Type RMC), intermediate metal conduit (Type IMC), with listed threaded or threadless fittings.

(3) Electrical metallic tubing (Type EMT) or dusttight wireways.

(4) Type MC, MV, TC, or TC-ER cable, including installation in cable tray systems. Type TC-ER cable shall include an equipment grounding conductor in addition to a drain wire that might be present. The cable shall be terminated with listed fittings.

(5) Types PLTC and PLTC-ER cable in accordance with Part II or III of Article 725, including installation in cable tray systems. The cable shall be terminated with listed fittings. Type PLTC-ER cable shall include an equipment grounding conductor in addition to a drain wire that might be present.

(6) Types ITC and ITC-ER cable as permitted in 727.4 and terminated with listed fittings. Type ITC-ER cable shall include an equipment grounding conductor in addition to a drain wire.

(7) Where metal conduit will not provide sufficient corrosion resistance, any of the following shall be permitted:

(8) Listed reinforced thermosetting resin conduit (RTRC), factory elbows, and associated fittings, all marked with suffix -XW

(9) PVC-coated rigid metal conduit (RMC), factory elbows, and associated fittings

(10) PVC-coated intermediate metal conduit (IMC), factory elbows, and associated fittings

(11) In industrial establishments

~~with restricted public access, where the conditions of maintenance and supervision ensure that only qualified persons service the installation,~~

a. Schedule 80 PVC conduit, factory elbows, and associated fittings .

(12) Optical fiber cable Types OFNP, OFCP, OFNR, OFCR, OFNG, OFCG, OFN, and OFC shall be permitted to be installed in cable trays or any other raceway in accordance with 502.10(B). Optical fiber cables shall be sealed in accordance with 502.15.

(13) Cablebus.

(14) In industrial ~~establishments with restricted public access, where the conditions of maintenance and supervision ensure that only qualified persons service the installation,~~ establishments listed Type P cable with or without metal braid armor, with an overall jacket, terminated with listed fittings, and installed in accordance with 337.10.

Informational Note: For information on construction, testing, and marking of Type P cable, see ANSI/UL 1309-2017, *Marine Shipboard Cable*.

Statement of Problem and Substantiation for Public Input

The term industrial establishment is used throughout Articles 500 through 506. Where the term is used the following text is added: "restricted access where the conditions of maintenance and engineering supervision ensure that only qualified persons install and service the installation. By

creating a definition, the added text can be removed from each location where the term appears. This will remove clutter from the section or subdivision where the term appears which will improve readability.

The proposed definition adds the requirement for the AHJ to approve the building for industrial use. This will help to add some consistency to the use of the less restrictive requirements for industrial establishments.

Related Public Inputs for This Document

Related Input	Relationship
Public Input No. 2494-NFPA 70-2020 [New Definition after Definition: Inherently Safe Optical Ra...]	

Submitter Information Verification

Submitter Full Name: John Simmons
Organization: Florida East Coast JATC
Street Address:
City:
State:
Zip:
Submittal Date: Sun Aug 23 16:33:52 EDT 2020
Committee: NEC-P14

Committee Statement

Resolution: The recommendation is predicated on the inclusion of a new definition of Industrial Establishments in Article 100. This requires action by CMP-1 during the First Draft phase of the revision process. If accepted, comments will be submitted for action during the Second Draft phase of the revision process.

Public Input No. 2549-NFPA 70-2020 [Section No. 502.10(B)(1)]

(1) General.

In Class II, Division 2 locations, the following wiring methods shall be permitted:

(1) All wiring methods permitted in 502.10(A).

(2) Rigid metal conduit (Type RMC), intermediate metal conduit (Type IMC), with listed threaded or threadless fittings.

(3) Electrical metallic tubing (Type EMT) or dusttight wireways.

(4) Type MC, MV, TC, or TC-ER cable, including installation in cable tray systems. Type TC-ER cable shall include an equipment grounding conductor in addition to a drain wire that might be present. The cable shall be terminated with listed fittings.

(5) Types PLTC and PLTC-ER cable in accordance with Part II or III of Article 725, including installation in cable tray systems. The cable shall be terminated with listed fittings. Type PLTC-ER cable shall include an equipment grounding conductor in addition to a drain wire that might be present.

(6) Types ITC and ITC-ER cable as permitted in 727.4 and terminated with listed fittings. Type ITC-ER cable shall include an equipment grounding conductor in addition to a drain wire.

(7) Where metal conduit will not provide sufficient corrosion resistance, any of the following shall be permitted:

(8) Listed reinforced thermosetting resin conduit (RTRC), factory elbows, and associated fittings, all marked with suffix -XW

(9) PVC-coated rigid metal conduit (RMC), factory elbows, and associated fittings

(10) PVC-coated intermediate metal conduit (IMC), factory elbows, and associated fittings

(11) In industrial establishments with restricted public access, where the conditions of maintenance and supervision ensure that only qualified persons service the installation, Schedule 80 PVC conduit, factory elbows, and associated fittings

(12) Optical fiber cable Types OFNP, OFCP, OFNR, OFCR, OFNG, OFCG, OFN, and OFC shall be permitted to be installed in cable trays or any other raceway in accordance with 502.10(B). Optical fiber cables shall be sealed in accordance with 502.15.

(13) Cablebus.

(14) In industrial establishments with restricted public access, where the conditions of maintenance and supervision ensure that only qualified persons service the installation, listed Type P cable with or without metal braid armor, with an overall jacket, terminated with listed fittings, and installed in accordance with 337.10.

Informational Note: For information on construction, testing, and marking of Type P cable, see ~~ANSI/~~ UL ~~1309-2017~~ 1309A , ~~*Marine Shipboard*~~ *Cable for use in Mobile Installations* .

Statement of Problem and Substantiation for Public Input

The requirements for Type P cables are now contained in UL 1309A, Cable for use in Mobile Installations. The following informational notes in the code that reference UL1309 have been updated to the correct UL1309A standard containing these requirements.

Related Public Inputs for This Document

Related Input	Relationship
Public Input No. 2544-NFPA 70-2020 [Section No. 501.10(A)(1)]	Companion
Public Input No. 2545-NFPA 70-2020 [Section No. 501.10(A)(2)]	Companion
Public Input No. 2546-NFPA 70-2020 [Section No. 501.10(B)(1)]	Companion
Public Input No. 2547-NFPA 70-2020 [Section No. 502.10(A)(2)]	Companion
Public Input No. 2548-NFPA 70-2020 [Section No. 502.10(A)(2)]	Companion
Public Input No. 2550-NFPA 70-2020 [Section No. 505.15(B)(1)]	Companion
Public Input No. 2551-NFPA 70-2020 [Section No. 505.15(B)(2)]	Companion
Public Input No. 2552-NFPA 70-2020 [Section No. 505.15(C)(1)]	Companion
Public Input No. 2544-NFPA 70-2020 [Section No. 501.10(A)(1)]	
Public Input No. 2545-NFPA 70-2020 [Section No. 501.10(A)(2)]	
Public Input No. 2546-NFPA 70-2020 [Section No. 501.10(B)(1)]	
Public Input No. 2547-NFPA 70-2020 [Section No. 502.10(A)(2)]	
Public Input No. 2548-NFPA 70-2020 [Section No. 502.10(A)(2)]	
Public Input No. 2550-NFPA 70-2020 [Section No. 505.15(B)(1)]	
Public Input No. 2551-NFPA 70-2020 [Section No. 505.15(B)(2)]	
Public Input No. 2552-NFPA 70-2020 [Section No. 505.15(C)(1)]	

Submitter Information Verification

Submitter Full Name: Paul Knapp
Organization: UL LLC
Street Address:
City:
State:
Zip:
Submittal Date: Mon Aug 24 14:09:46 EDT 2020
Committee: NEC-P14

Committee Statement

Resolution: FR-8398-NFPA 70-2021

Statement: The revision adds text to (2) to clarify that PVC coated metal conduits are permitted for general applications where increased levels of corrosion protection are not required. It is necessary to retain threaded and threadless in respect to fittings for clarity. The revision to (3) clarifies that compression fittings are permitted for use with EMT in Class II, Division 2 locations. The revision to the informational note updates the referenced standard and addresses Style Manual requirements. CMP-14 reaffirms the use of RTRC conduit should not be limited to only industrial establishments. Items 7(b) and (c) are retained for clarity.

Public Input No. 863-NFPA 70-2020 [Section No. 502.10(B)(1)]

(1) General.

In Class II, Division 2 locations, the following wiring methods shall be permitted:

(1) All wiring methods permitted in 502.10(A).

(2) Rigid metal conduit (Type RMC), intermediate metal conduit (Type IMC), with listed threaded or threadless fittings.

(3) Electrical metallic tubing (Type EMT) with compression type connectors or couplings, or dusttight wireways.

(4) Type MC, MV, TC, or TC-ER cable, including installation in cable tray systems. Type TC-ER cable shall include an equipment grounding conductor in addition to a drain wire that might be present. The cable shall be terminated with listed fittings.

(5) Types PLTC and PLTC-ER cable in accordance with Part II or III of Article 725, including installation in cable tray systems. The cable shall be terminated with listed fittings. Type PLTC-ER cable shall include an equipment grounding conductor in addition to a drain wire that might be present.

(6) Types ITC and ITC-ER cable as permitted in 727.4 and terminated with listed fittings. Type ITC-ER cable shall include an equipment grounding conductor in addition to a drain wire.

(7) Where metal conduit will not provide sufficient corrosion resistance, any of the following shall be permitted:

(8) Listed reinforced thermosetting resin conduit (RTRC), factory elbows, and associated fittings, all marked with suffix -XW

(9) PVC-coated rigid metal conduit (RMC), factory elbows, and associated fittings

(10) PVC-coated intermediate metal conduit (IMC), factory elbows, and associated fittings

(11) In industrial establishments with restricted public access, where the conditions of maintenance and supervision ensure that only qualified persons service the installation, Schedule 80 PVC conduit, factory elbows, and associated fittings

(12) Optical fiber cable Types OFNP, OFCP, OFNR, OFCR, OFNG, OFCG, OFN, and OFC shall be permitted to be installed in cable trays or any other raceway in accordance with 502.10(B). Optical fiber cables shall be sealed in accordance with 502.15.

(13) Cablebus.

(14) In industrial establishments with restricted public access, where the conditions of maintenance and supervision ensure that only qualified persons service the installation, listed Type P cable with or without metal braid armor, with an overall jacket, terminated with listed fittings, and installed in accordance with 337.10.

Informational Note: For information on construction, testing, and marking of Type P cable, see ANSI/UL 1309-2017, *Marine Shipboard Cable*.

Statement of Problem and Substantiation for Public Input

Type EMT Electrical Metallic Tubing is permitted in Class II Division 2 locations but the type of connector or coupling has not been addressed. The connectors or couplings where used shall be of the compression types to prevent the entrance of dust through the possible openings around the couplings and connectors. The use of compression fittings will prevent the possible entrance of dust

into the raceway system. Lowell Reith-submitter.

Submitter Information Verification

Submitter Full Name: David Hittinger
Organization: IEC
Street Address:
City:
State:
Zip:
Submittal Date: Mon Apr 13 17:24:05 EDT 2020
Committee: NEC-P14

Committee Statement

Resolution: FR-8398-NFPA 70-2021

Statement: The revision adds text to (2) to clarify that PVC coated metal conduits are permitted for general applications where increased levels of corrosion protection are not required. It is necessary to retain threaded and threadless in respect to fittings for clarity. The revision to (3) clarifies that compression fittings are permitted for use with EMT in Class II, Division 2 locations. The revision to the informational note updates the referenced standard and addresses Style Manual requirements. CMP-14 reaffirms the use of RTRC conduit should not be limited to only industrial establishments. Items 7(b) and (c) are retained for clarity.

Public Input No. 1897-NFPA 70-2020 [Section No. 502.10(B)(2)]

(2) Flexible Connections.

Where provision must be made for flexibility, 502.10(A)(2) shall apply.

Exception: Interlocking type MC cable without an outer jacket shall be permitted.

Statement of Problem and Substantiation for Public Input

Type MC cable without an outer jacket is allowed in Class II, Division 2 locations via 502.10(B)(1)(2). It seems rather absurd to require an outer jacket and special fittings if I am using the cable simply due to flexibility being desired.

Submitter Information Verification

Submitter Full Name: Ryan Jackson
Organization: Ryan Jackson
Street Address:
City:
State:
Zip:
Submittal Date: Tue Jul 14 11:56:10 EDT 2020
Committee: NEC-P14

Committee Statement

Resolution: The substantiation notes that MC cable without outer jacket is permitted in Class II, Division 1 locations. MC cable must meet the requirements of Article 330 which addresses supports and bending radii. These provisions are in place to prevent separation of the armor which ensures the non-jacketed cable will be safe from arcing that can take place with separated armor. Additionally, separated armor will allow the accumulation of combustible dusts within the raceway. Using MC cable for flexibility means that there are no supports and bending radii may not be preserved. Using the cable flexibility, there will be movement and a risk that the armor will separate. The overall jacket will contain arcs and prevent the accumulation of dusts. The cable is not simply being used for flexibility, it must also provide a safe connection which cannot be ensured without the outer jacket.

Public Input No. 2704-NFPA 70-2020 [Section No. 502.15]

502.15 Sealing, Class II, Divisions 1 and 2.

Where a raceway provides communication between an enclosure that is required to be dust-ignitionproof and one that is not, suitable means shall be provided to prevent the entrance of dust into the dust-ignitionproof enclosure through the raceway. One of the following means shall be permitted:

(1) A permanent and effective seal

(2) A horizontal raceway not less than 3.05 m (10 ft) long

(3) A vertical raceway not less than 1.5 m (5 ft) long and extending downward from the dust-ignitionproof enclosure

(4) A raceway installed in a manner equivalent to (2) or (3) that extends only horizontally and downward from the dust-ignition proof enclosures

(5) Electrical sealing putty shall be permitted as a method of sealing.

Where a raceway provides communication between an enclosure that is required to be dust-ignitionproof and an enclosure in an unclassified location, seals shall not be required.

Sealing fittings shall be accessible.

Seals shall not be required to be explosionproof.

~~Informational Note: Electrical sealing putty is a method of sealing.~~

Statement of Problem and Substantiation for Public Input

The informational note provides a recommendation/interpretation which is not permitted by section 3.1.3 of the NEC Style Manual. The statement that electrical sealing putty is a method of sealing is not enforceable and may create confusion where an installer uses it to provide a seal in a Class II location and it is challenged during an inspection. Placing the permission for the sealing putty makes it clear that electrical sealing putty is permitted, if this is not the case, the informational note should be deleted.

Submitter Information Verification

Submitter Full Name: John Simmons
Organization: Florida East Coast JATC
Street Address:
City:
State:
Zip:
Submittal Date: Fri Aug 28 18:11:20 EDT 2020
Committee: NEC-P14

Committee Statement

Resolution: FR-8531-NFPA 70-2021

Statement: Convert the informational note to permissive text in the requirement. The informational note contains a recommendation which violates Section 3.1.3 of the NEC Style Manual. While the information in the informational note may be true, list item (1) allows permanent and effective seals. Adding a new list item (5) to the section for one method when there are others can lead to confusion.

Public Input No. 1139-NFPA 70-2020 [Section No. 502.30]

502.30 Grounding and Bonding, Class II, Divisions 1 and 2.

Regardless of the voltage of the electrical system, wiring and equipment in Class II, Division 1 and 2 locations shall be grounded as specified in Article 250 and in accordance with the requirements of 502.30(A) and (B).

(A) Bonding.

~~The locknut-bushing and double-locknut types of contact~~ Standard locknuts shall not be depended on for bonding purposes~~, but bonding jumpers with proper fittings or other approved means of bonding~~ . Listed devices such as bonding-type locknuts or bushing with bonding jumpers shall be used. Such means of bonding shall apply to all intervening raceways, fittings, boxes, enclosures, and so forth, between Class II locations and the point of grounding for service equipment or point of grounding of a separately derived system.

Exception: The specific bonding means shall only be required to the nearest point where the grounded circuit conductor and the grounding electrode conductor are connected together on the line side of the building or structure disconnecting means as specified in 250.32(B) if the branch-circuit overcurrent protection is located on the load side of the disconnecting means.

(B) Types of Equipment Grounding Conductors.

Liquidtight flexible metal conduit shall include an equipment bonding jumper or equipment grounding conductor of the wire type in compliance with 250.102.

Exception: In Class II, Division 2 locations, the bonding jumper shall be permitted to be deleted where all of the following conditions are met:

(1) Listed liquidtight flexible metal conduit 1.8 m (6 ft) or less in length, with fittings listed for grounding, is used.

(2) Overcurrent protection in the circuit is limited to 10 amperes or less.

(3) The load is not a power utilization load.

Statement of Problem and Substantiation for Public Input

The current language uses terms that are vague and unenforceable ("proper fittings"). This PI borrows language from 250.92, which is the intent of this requirement. It also allows for a an equipment grounding conductor of the wire type to be installed in lieu of a bonding jumper. The original proposal from 2011 was to clarify that the FMC should not be relied upon as the sole effective ground-fault current path, and installing an EGC satisfies that criteria.

See 501.30 for a similar PI.

Related Public Inputs for This Document

Related Input	Relationship
Public Input No. 1138-NFPA 70-2020 [Section No. 501.30]	Similar

Submitter Information Verification

Submitter Full Name: Ryan Jackson

Organization: Ryan Jackson

Street Address:
City:
State:
Zip:
Submittal Date: Mon May 18 16:19:48 EDT 2020
Committee: NEC-P14

Committee Statement

Resolution: A first revision has been created that revises the entire section. The language concerning the locknut/bushing and double locknut connections remains in the first revision. The intent of requiring bonding jumpers is to reduce the chance of arcing which may occur with mechanical devices (locknuts and bushings) which may loosen. The proposed listing requirement is unnecessary as Article 250 provides the listing requirements for grounding and bonding devices.The proposed addition of the term equipment grounding conductor in (B) does not meet the intent of the subdivision. An equipment bonding jumper connects two parts of the equipment grounding system. Liquidtight is approved in Class II, Divisions 1 and 2 only where flexibility is needed. The bonding jumper ensures integrity of the grounding path.

Public Input No. 2125-NFPA 70-2020 [Section No. 502.30]

502.30 Grounding and Bonding, Class II, Divisions 1 and 2.

~~Regardless of the voltage of the electrical system, wiring and~~
All electrical equipment in

~~Class II~~
Class II ,

~~Division~~
Divisions 1 and 2

~~locations~~
shall be grounded

~~as specified~~
and bonded as required in Article 250

~~and in accordance with the requirements of 502~~

.

~~30(A) and (B).~~

~~**(A)** Bonding.~~

~~The locknut-bushing and double-locknut types of contact shall not be depended on for bonding purposes, but bonding jumpers with proper fittings or other approved means of bonding shall be used. Such means of bonding shall apply to all intervening raceways, fittings, boxes, enclosures, and so forth, between Class II locations and the point of grounding for service equipment or point of grounding of a separately derived system.~~

~~*Exception: The specific bonding means shall only be required to the nearest point where the grounded circuit conductor and the grounding electrode conductor are connected together on the line side of the building or structure disconnecting means as specified in 250.32(B) if the branch-circuit overcurrent protection is located on the load side of the disconnecting means.*~~

~~**(B)** Types of Equipment Grounding Conductors.~~

~~Liquidtight flexible metal conduit shall include an equipment bonding jumper of the wire type in compliance with 250.102 .~~

~~*Exception: In Class II, Division 2 locations, the bonding jumper shall be permitted to be deleted where all of the following conditions are met:*~~

~~*(1) Listed liquidtight flexible metal conduit 1.8 m (6 ft) or less in length, with fittings listed for grounding, is used.*~~

~~*(2) Overcurrent protection in the circuit is limited to 10 amperes or less.*~~

~~*(3) The load is not a power utilization load.*~~

Informational Note: See 250.100 for specific grounding and bonding requirements for hazardous (classified) locations.

Statement of Problem and Substantiation for Public Input

This is a companion proposal to one submitted for the revision of Section 250.100.

Related Public Inputs for This Document

Related Input	Relationship
Public Input No. 2124-NFPA 70-2020 [Section No. 501.30]	Grounding and Bonding in hazardous locations
Public Input No. 2120-NFPA 70-2020 [Article 100]	Grounding and Bonding in hazardous locations
Public Input No. 2127-NFPA 70-2020 [Section No. 505.25]	
Public Input No. 2129-NFPA 70-2020 [Section No. 348.60]	
Public Input No. 2130-NFPA 70-2020 [Section No. 350.60]	
Public Input No. 2131-NFPA 70-2020 [Section No. 506.25]	
Public Input No. 2132-NFPA 70-2020 [Section No. 250.118]	

Submitter Information Verification

Submitter Full Name: Paul Guidry
Organization: Fluor Enterprises, Inc.
Affiliation: Associated Builders and Contractors
Street Address:
City:
State:
Zip:
Submittal Date: Sun Aug 02 12:04:50 EDT 2020
Committee: NEC-P14

Committee Statement

Resolution: The requirements found in 502.30 should remain. A first revision references Part VI of Article 250 for grounding and the bonding requirements include a reference to Part V of Article 250, including 250.100. The remainder of the section addresses bonding requirements. The ban on locknut/bushing and double locknut bonding is to ensure there will not be any sparking due to loose connections. Sparking will not normally create a fire/explosion hazard in unclassified locations but it can be catastrophic in hazardous locations. This is eliminated by the use of the techniques listed in the subdivision. The same reasoning can be used for the use of bonding jumpers in flexible conduit.

Public Input No. 2602-NFPA 70-2020 [Section No. 502.30]

502.30 Grounding and Bonding, Class II, Divisions 1 and 2.

Regardless of the voltage of the electrical system, wiring and equipment in ~~Class II~~ Class II , Division 1 and 2 ~~locations shall be grounded as specified in Article~~ 250 ~~and in accordance~~ locations locations shall comply with the requirements of 502.30(A) and 502.30 (B).

(A)

Grounding

Wiring and equipment in Class II, Division 1 and 2 locations shall be grounded as required in Article 250.

(B) Bonding.

The locknut-bushing and double-locknut types of contact shall not be depended on for bonding purposes, but bonding jumpers with proper fittings or other approved means of bonding shall be used. Such means of bonding shall apply to all intervening raceways, fittings, boxes, enclosures, and ~~so forth, between~~ other parts of raceway systems between Class II locations and the point of grounding for service equipment or point of grounding of a separately derived system.

Exception: The specific bonding means shall only be required to the nearest point where the grounded circuit conductor and the grounding electrode conductor are connected together on the line side of the building or structure disconnecting means as specified in 250.32(B) if the branch-circuit overcurrent protection is located on the load side of the disconnecting means.

~~**(B)** Types of Equipment Grounding Conductors.~~

Liquidtight flexible metal conduit shall include an equipment bonding jumper of the wire type in compliance with 250.102 .

Exception: In Class II, Division 2 locations, the bonding jumper shall be permitted to be deleted where all of the following conditions are met:

(1) Listed liquidtight flexible metal conduit 1.8 m (6 ft) or less in length, with fittings listed for grounding, is used.

(2) Overcurrent protection in the circuit is limited to 10 amperes or less.

(3) The load is not a power utilization load.

Statement of Problem and Substantiation for Public Input

Section 5003.30 provides requirements for grounding and bonding. There is only one requirement for grounding, and it is to comply with Article 250. All the other requirements in the section apply to bonding, however the current text has a bonding requirement under subdivision (B) which is titled "types of equipment grounding conductors". The subdivisions address an equipment bonding jumper and refers to 250.102 which does not apply to equipment grounding conductors. A major part of this proposal reorganizes the section and places the grounding requirement in subdivision (A) Grounding, and the bonding requirements in subdivision (B) Bonding. The proposal changed the word "approved" in the phrase "or other approved means" to "identified". The word approved places the responsibility of deciding the suitability of a product on the authority having jurisdiction which in some cases may lead to inconsistency. The term identified provides the AHJ with some guidance in deciding the suitability of the bonding means. Also, the phrase "so forth" is changed to "other parts of raceway systems". The phrase so forth is ambiguous. The revised wording would add clarity. The term Class I is removed to

be consistent with the Zone class designations.

Related Public Inputs for This Document

Related Input	Relationship
Public Input No. 2599-NFPA 70-2020 [Section No. 501.30]	
Public Input No. 2596-NFPA 70-2020 [Section No. 505.25]	
Public Input No. 2597-NFPA 70-2020 [Section No. 506.25]	
Public Input No. 2604-NFPA 70-2020 [Section No. 503.30]	
Public Input No. 2606-NFPA 70-2020 [Section No. 501.30]	

Submitter Information Verification

Submitter Full Name: John Simmons
Organization: Florida East Coast JATC
Street Address:
City:
State:
Zip:
Submittal Date: Tue Aug 25 15:15:29 EDT 2020
Committee: NEC-P14

Committee Statement

Resolution: FR-8383-NFPA 70-2021

Statement: Section 4.1.4 of the 2020 NEC Style Manual prohibits references to an entire article, with the exception of Article 100. As such, the corresponding language in this section is revised to refer to Parts V and VI of Article 250 in compliance with the Style Manual, without changing the intent of the section. The exceptions have been revised to positive text as directed by the Style Manual. In addition, the section is updated to require “bonding and grounding” to meet the intent of the Article 250 requirements. The words “in accordance with the requirements of” do not add to the charging language and are deleted for brevity. The committee is deleting “and so forth” and adding cable trays into this section to make it clear that cable trays must be bonded in the same manner as raceways. The code panel is removing the word “intervening” because it is unnecessary but adding “metal” so it’s clear that this requirement does not apply to nonmetallic raceways or cable trays. The requirement for metal struts, angles, or channels is added to make it clear when they are used for type TC-ER, PLTC-ER, or ITC-ER cables, they must be bonded accordingly. Finally, “Power Utilization Load” is currently not defined and in the interest of usability, the code making panel is clarifying the intent by stating in which circuits flexible liquidtight metal conduit is not required to have an additional internal equipment bonding jumper.

Public Input No. 4077-NFPA 70-2020 [Section No. 502.30 [Excluding any Sub-Sections]]

Regardless of the voltage of the electrical system, wiring and equipment in Class II, Division 1 and 2 locations shall be grounded as specified in Article 250 and in accordance ~~with the requirements of~~ with 502.30(A) and (B).

Statement of Problem and Substantiation for Public Input

"Deleting the words ""the requirements of"" does not change the meaning of the section.
The panel should consider revising the section due to a Style Manual issue 4.1.4 where a section shall not reference a complete article."

Submitter Information Verification

Submitter Full Name: David Williams
Organization: Delta Charter Township
Street Address:
City:
State:
Zip:
Submittal Date: Wed Sep 09 20:14:43 EDT 2020
Committee: NEC-P14

Committee Statement

Resolution: FR-8383-NFPA 70-2021

Statement: Section 4.1.4 of the 2020 NEC Style Manual prohibits references to an entire article, with the exception of Article 100. As such, the corresponding language in this section is revised to refer to Parts V and VI of Article 250 in compliance with the Style Manual, without changing the intent of the section. The exceptions have been revised to positive text as directed by the Style Manual. In addition, the section is updated to require “bonding and grounding” to meet the intent of the Article 250 requirements. The words “in accordance with the requirements of” do not add to the charging language and are deleted for brevity. The committee is deleting “and so forth” and adding cable trays into this section to make it clear that cable trays must be bonded in the same manner as raceways. The code panel is removing the word “intervening” because it is unnecessary but adding “metal” so it’s clear that this requirement does not apply to nonmetallic raceways or cable trays. The requirement for metal struts, angles, or channels is added to make it clear when they are used for type TC-ER, PLTC-ER, or ITC-ER cables, they must be bonded accordingly. Finally, “Power Utilization Load” is currently not defined and in the interest of usability, the code making panel is clarifying the intent by stating in which circuits flexible liquidtight metal conduit is not required to have an additional internal equipment bonding jumper.

Public Input No. 4422-NFPA 70-2020 [Section No. 502.30 [Excluding any Sub-Sections]]

Regardless of the voltage of the electrical system, wiring and equipment in Class II, Division 1 and 2 locations shall be bonded and grounded as specified in Parts V and VI of Article 250 and in accordance with the requirements of 502.30(A) and (B).

Statement of Problem and Substantiation for Public Input

Section 4.1.4 of the 2020 NEC(r) Style Manual prohibits references to an entire article, with the exception of Article 100. As such, it is proposed to refer to Parts V and VI of Article 250 in compliance with the Style Manual, without changing the intent of the section.

Related Public Inputs for This Document

Related Input	Relationship
Public Input No. 4419-NFPA 70-2020 [Section No. 501.30 [Excluding any Sub-Sections]]	

Submitter Information Verification

Submitter Full Name: Richard Holub
Organization: The DuPont Company, Inc.
Street Address:
City:
State:
Zip:
Submittal Date: Thu Sep 10 12:50:22 EDT 2020
Committee: NEC-P14

Committee Statement

Resolution: FR-8383-NFPA 70-2021

Statement: Section 4.1.4 of the 2020 NEC Style Manual prohibits references to an entire article, with the exception of Article 100. As such, the corresponding language in this section is revised to refer to Parts V and VI of Article 250 in compliance with the Style Manual, without changing the intent of the section. The exceptions have been revised to positive text as directed by the Style Manual. In addition, the section is updated to require “bonding and grounding” to meet the intent of the Article 250 requirements. The words “in accordance with the requirements of” do not add to the charging language and are deleted for brevity. The committee is deleting “and so forth” and adding cable trays into this section to make it clear that cable trays must be bonded in the same manner as raceways. The code panel is removing the word “intervening” because it is unnecessary but adding “metal” so it’s clear that this requirement does not apply to nonmetallic raceways or cable trays. The requirement for metal struts, angles, or channels is added to make it clear when they are used for type TC-ER, PLTC-ER, or ITC-ER cables, they must be bonded accordingly. Finally, “Power Utilization Load” is currently not defined and in the interest of usability, the code making panel is clarifying the intent by stating in which circuits flexible liquidtight metal conduit is not required to have an additional

internal equipment bonding jumper.

Public Input No. 3206-NFPA 70-2020 [Section No. 502.35]

502.35 ~~Surge~~ 35 Overvoltage Protection — Class II, Divisions 1 and 2.

~~Surge~~ Overvoltage protection devices, surge arresters and surge-protective devices installed in a Class II, Division 1 location shall be in suitable enclosures. Surge-protective capacitors shall be of a type designed for specific duty.

Additional Proposed Changes

File Name	Description	Approved
Code_Input.docx	input to improve overvoltage protection requirements	

Statement of Problem and Substantiation for Public Input

In the 2020 NEC cycle, ARTICLES 280 and 285 were combined to make ARTICLE 242. This was a positive change that began to address the issue of OVERVOLTAGE as a technical subject apart from particular product methods (SPDs and Surge Arresters). There are other technologies and products to address the issue of OVERVOLTAGE. This input attempts to add one such technology as well as correlate the other code references to the subject of OVERVOLTAGE, surge protective devices, and surge arresters to be consistent. This is important to allow for other technologies to be utilized without prejudice to certain products promoted by manufacturers.

Related Public Inputs for This Document

Related Input	Relationship
Public Input No. 3200-NFPA 70-2020 [Section No. 242.1]	
Public Input No. 3202-NFPA 70-2020 [New Article after 100]	
Public Input No. 3203-NFPA 70-2020 [New Article after 242]	
Public Input No. 3205-NFPA 70-2020 [Section No. 501.35]	
Public Input No. 3208-NFPA 70-2020 [Section No. 551.72(E)]	
Public Input No. 3209-NFPA 70-2020 [Section No. 490.24]	
Public Input No. 3210-NFPA 70-2020 [Section No. 490.48(A)]	
Public Input No. 3211-NFPA 70-2020 [Section No. 620.51(E)]	
Public Input No. 3212-NFPA 70-2020 [Section No. 645.18]	
Public Input No. 3214-NFPA 70-2020 [Section No. 670.6]	
Public Input No. 3216-NFPA 70-2020 [Section No. 694.7(D)]	
Public Input No. 3217-NFPA 70-2020 [Section No. 695.15]	
Public Input No. 3218-NFPA 70-2020 [Section No. 700.8]	
Public Input No. 3219-NFPA 70-2020 [Section No. 708.20(D)]	

Submitter Information Verification

Submitter Full Name: Karl Cunningham
Organization: Self Employed
Street Address:
City:

State:

Zip:

Submittal Date: Sun Sep 06 18:19:28 EDT 2020

Committee: NEC-P14

Committee Statement

Resolution: CMP-14 understands that this change is being considered by CMP-10 and will revisit this recommendation during the Second Draft phase of the process.

Substantiation for Changes: In the 2020 NEC cycle, ARTICLES 280 and 285 were combined to make ARTICLE 242. This was a positive change that began to address the issue of OVERVOLTAGE as a technical subject apart from particular product methods (SPDs and Surge Arresters). There are other technologies and products to address the issue of OVERVOLTAGE. This input attempts to add one such technology as well as correlate the other code references to the subject of OVERVOLTAGE, surge protective devices, and surge arresters to be consistent. This is important to allow for other technologies to be utilized without prejudice to certain products promoted by manufacturers.

ARTICLE 100 - DEFINITIONS

Voltage Stabilizing Ground Reference (VSGR) System – an engineered assembly of interconnected passive inductive devices that utilize mutual counter electro-magnetic inductance to stabilize phase voltages of a connected supply system with respect to each other and to ground.

ARTICLE 242 Overvoltage Protection

Part I. General

242.1 Scope.
This article provides the general requirements, installation requirements, and connection requirements for overvoltage protection and overvoltage protective devices. Part II covers surge-protective devices (SPDs) permanently installed on premises wiring systems of not more than 1000 volts, nominal, while Part III covers surge arresters permanently installed on premises wiring systems over 1000 volts, nominal. Part IV covers Voltage Stabilizing Ground Reference (VSGR) systems permanently installed on premises wiring systems for any voltage.

Informational Note: Article 242 combines and replaces Articles 280 and 285 in *NFPA 70*-2017.

242.3 Other Articles.
Equipment shall be protected against overvoltage in accordance with the article in this *Code* that covers the type of equipment or location specified in Table 242.3.

Table 242.3 Other Articles

Equipment	Article
Class I locations	501
Class II locations	502
Community antenna television and radio distribution systems	820
Critical operations power systems	708

Table 242.3 Other Articles

Equipment	Article
Elevators, dumbwaiters, escalators, moving walks, platform lifts, and stairway chairlifts	620
Emergency systems	700
Equipment over 1000 volts, nominal	490
Fire pumps	695
Industrial machinery	670
Information technology equipment	645
Modular data centers	646
Outdoor overhead conductors over 1000 volts	399
Radio and television equipment	810
Receptacles, cord connectors, and attachment plugs (caps)	406
Wind electric systems	694

Part II. Surge-Protective Devices (SPDs), 1000 Volts or Less
Informational Note: Surge arresters 1000 volts or less are also known as Type 1 SPDs.

242.6 Uses Not Permitted.
An SPD device shall not be installed in the following:

1. (1)

   Circuits over 1000 volts

2. (2)

   On ungrounded systems, impedance grounded systems, or corner grounded delta systems unless listed specifically for use on these systems

3. (3)

   Where the rating of the SPD is less than the maximum continuous phase-to-ground voltage at the power frequency available at the point of application

242.8 Listing.
An SPD shall be a listed device.

242.10 Short-Circuit Current Rating.
The SPD shall be marked with a short-circuit current rating and shall not be installed at a point on the system where the available fault current is in excess of that rating. This marking requirement shall not apply to receptacles.

242.12 Type 1 SPDs.
Type 1 SPDs shall be installed in accordance with 242.12(A) and (B).

242.12(A) Installation.
Type 1 SPDs shall be permitted to be connected in accordance with one of the following:

1. (1)

   To the supply side of the service disconnect as permitted in 230.82(4)

2. (2)

   As specified in 242.14

242.12(B) At the Service.
When installed at services, Type 1 SPDs shall be connected to one of the following:

1. (1)

   Grounded service conductor

2. (2)

   Grounding electrode conductor

3. (3)

   Grounding electrode for the service

4. (4)

   Equipment grounding terminal in the service equipment

242.14 Type 2 SPDs.
Type 2 SPDs shall be installed in accordance with 242.14(A) through (C).

242.14(A) Service-Supplied Building or Structure.
Type 2 SPDs shall be connected anywhere on the load side of a service disconnect overcurrent device required in 230.91 unless installed in accordance with 230.82(8).

242.14(B) Feeder-Supplied Building or Structure.
Type 2 SPDs shall be connected at the building or structure anywhere on the load side of the first overcurrent device at the building or structure.

242.14(C) Separately Derived System.
The SPD shall be connected on the load side of the first overcurrent device in a separately derived system.

242.16 Type 3 SPDs.
Type 3 SPDs shall be permitted to be installed on the load side of branch-circuit overcurrent protection up to the equipment served. If included in the manufacturer's instructions, the Type 3 SPD connection shall be a minimum 10 m (30 ft) of conductor distance from the service or separately derived system disconnect.

242.18 Type 4 and Other Component Type SPDs.
Type 4 component assemblies and other component type SPDs shall only be installed by the equipment manufacturer.

242.20 Number Required.
Where used at a point on a circuit, the SPD shall be connected to each ungrounded conductor.

242.22 Location.
SPDs shall be permitted to be located indoors or outdoors and shall be made inaccessible to unqualified persons unless listed for installation in accessible locations.

242.24 Routing of Connections.
The conductors used to connect the SPD to the line or bus and to ground shall not be any longer than necessary and shall avoid unnecessary bends.

242.26 Connection.
Where an SPD device is installed, it shall comply with 242.12, 242.14, 242.16, 242.28. and 242.30.

242.28 Conductor Size.
Line and grounding conductors shall not be smaller than 14 AWG copper or 12 AWG aluminum.

242.30 Connection Between Conductors.
An SPD shall be permitted to be connected between any two conductors — ungrounded conductor(s), grounded conductor, equipment grounding conductor, or grounding electrode conductor. The grounded conductor and the equipment grounding conductor shall be interconnected only by the normal operation of the SPD during a surge.

242.32 Grounding Electrode Conductor Connections and Enclosures.
Except as indicated in this article, SPD grounding connections shall be made as specified in Article 250, Part III. Grounding electrode conductors installed in metal enclosures shall comply with 250.64(E).

Part III. Surge Arresters, Over 1000 Volts

242.40 Uses Not Permitted.
A surge arrester shall not be installed where the rating of the surge arrester is less than the maximum continuous phase-to-ground voltage at the power frequency available at the point of application.

242.42 Surge Arrester Selection.
The surge arresters shall comply with 242.42(A) and (B).

242.42(A) Rating.
The rating of a surge arrester shall be equal to or greater than the maximum continuous operating voltage available at the point of application.

242.42(A)(1) Solidly Grounded Systems.
The maximum continuous operating voltage shall be the phase-to-ground voltage of the system.

242.42(A)(2) Impedance or Ungrounded System.

The maximum continuous operating voltage shall be the phase-to-phase voltage of the system.

242.42(B) Silicon Carbide Types.

The rating of a silicon carbide-type surge arrester shall be not less than 125 percent of the rating specified in 242.42(A).

Informational Note No. 1: For further information on surge arresters, see IEEE C62.11-2012, *Standard for Metal-Oxide Surge Arresters for Alternating-Current Power Circuits (>1 kV)*, and IEEE C62.22-2009, *Guide for the Application of Metal-Oxide Surge Arresters for Alternating-Current Systems*.

Informational Note No. 2: The selection of a properly rated metal oxide arrester is based on considerations of maximum continuous operating voltage and the magnitude and duration of overvoltages at the arrester location as affected by phase-to-ground faults, system grounding techniques, switching surges, and other causes. See the manufacturer's application rules for selection of the specific arrester to be used at a particular location.

242.44 Number Required.

Where used at a point on a circuit, a surge arrester shall be connected to each ungrounded conductor. A single installation of such surge arresters shall be permitted to protect a number of interconnected circuits if no circuit is exposed to surges while disconnected from the surge arresters.

242.46 Location.

Surge arresters shall be permitted to be located indoors or outdoors. Surge arresters shall be made inaccessible to unqualified persons unless listed for installation in accessible locations.

242.48 Routing of Surge Arrester Equipment Grounding Conductors.

The conductor used to connect the surge arrester to line, bus, or equipment and to an equipment grounding conductor or grounding electrode connection point as provided in 242.50 shall not be any longer than necessary and shall avoid unnecessary bends.

242.50 Connection.

The arrester shall be connected to one of the following:

1. (1)

   Grounded service conductor

2. (2)

   Grounding electrode conductor

3. (3)

   Grounding electrode for the service

4. (4)

   Equipment grounding terminal in the service equipment

242.52 Surge-Arrester Conductors.

The conductor between the surge arrester and the line, and the surge arrester and the grounding connection, shall not be smaller than 6 AWG copper or aluminum.

242.54 Interconnections.

The surge arrester protecting a transformer that supplies a secondary distribution system shall be interconnected as specified in 242.54(A), (B), or (C).

242.54(A) Metal Interconnections.
A metal interconnection shall be made to the secondary grounded circuit conductor or the secondary circuit grounding electrode conductor, if, in addition to the direct grounding connection at the surge arrester, the connection complies with 242.54(A)(1) or (A)(2).

242.54(A)(1) Additional Grounding Connection.
The grounded conductor of the secondary has a grounding connection elsewhere to a continuous metal underground water piping system. In urban water-pipe areas where there are at least four water-pipe connections on the neutral conductor and not fewer than four such connections in each mile of neutral conductor, the metal interconnection shall be permitted to be made to the secondary neutral conductor with omission of the direct grounding connection at the surge arrester.

242.54(A)(2) Multigrounded Neutral System Connection.
The grounded conductor of the secondary system is part of a multigrounded neutral system or static wire of which the primary neutral conductor or static wire has at least four grounding connections in each 1.6 km (1 mile) of line in addition to a grounding connection at each service.

242.54(B) Through Spark Gap or Device.
Where the surge arrester grounding electrode conductor is not connected as in 242.54(A), or where the secondary is not grounded as in 242.54(A) but is otherwise grounded as in 250.52, an interconnection shall be made through a spark gap or listed device as required by 242.54(B)(1) or (B)(2).

242.54(B)(1) Ungrounded or Unigrounded Primary System.
For ungrounded or unigrounded primary systems, the spark gap for a listed device shall have a 60-Hz breakdown voltage of at least twice the primary circuit voltage but not necessarily more than 10 kV, and there shall be at least one other ground on the grounded conductor of the secondary that is not less than 6.0 m (20 ft) distant from the surge-arrester grounding electrode.

242.54(B)(2) Multigrounded Neutral Primary System.
For multigrounded neutral primary systems, the spark gap or listed device shall have a 60-Hz breakdown of not more than 3 kV, and there shall be at least one other ground on the grounded conductor of the secondary that is not less than 6.0 m (20 ft) distant from the surge-arrester grounding electrode.

242.54(C) By Special Permission.
An interconnection of the surge-arrester ground and the secondary neutral conductor, other than as provided in 242.54(A) or (B), shall be permitted to be made only by special permission.

242.56 Grounding Electrode Conductor Connections and Enclosures.
Except as indicated in this article, surge-arrester grounding electrode conductor connections shall be made as specified in Article 250, Parts III and X. Grounding electrode conductors installed in metal enclosures shall comply with 250.64(E).

Part IV. Voltage Stabilizing Ground Reference (VSGR) systems.

242.68 Listing.
A VSGR shall be a listed device or system composed of listed components.

242.70 Short-Circuit Current Rating.
The VSGR shall be marked with a short-circuit current rating and shall not be installed at a point on the system where the available fault current is in excess of that rating.

242.71 Voltage Rating.
The rating of the VSGR shall be equal to or greater than the maximum system continuous operating voltage at the point of application.

242.72 Installation.
VSGRs shall be installed in accordance with 242.72(A) through (C).

242.72(A) Service-Supplied Building or Structure.
VSGR shall be connected anywhere on the load side of a service disconnect overcurrent device required in 230.91 unless installed in accordance with 230.82(8).

242.72(B) Feeder-Supplied Building or Structure.
VSGR shall be connected at the building or structure anywhere on the load side of the first overcurrent device at the building or structure.

242.72(C) Separately Derived System.
VSGR shall be connected on the load side of the first overcurrent device in a separately derived system.

242.82 Location.
VSGRs shall be permitted to be located indoors or outdoors and shall be made inaccessible to unqualified persons unless listed for installation in accessible locations.

242.84 Conductor Size.
Line and grounding conductors shall not be smaller than 14 AWG copper or 12 AWG aluminum.

242.90 Connection Between Conductors.
VSGR connections shall follow the manufacturer's instructions for the system connections.

242.92 Grounding Electrode Conductor Connections and Enclosures.
Except as indicated in this article, VSGR grounding connections shall be made as specified in Article 250, Part III. Grounding electrode conductors installed in metal enclosures shall comply with 250.64(E).

501.35 Overvoltage ~~Surge~~ Protection.

501.35(A) Class I, Division 1.
Overvoltage protection devices, surge arresters, surge-protective devices, and capacitors shall be installed in enclosures identified for Class I, Division 1 locations. Surge-protective capacitors shall be of a type designed for specific duty.

501.35(B) Class I, Division 2.
Overvoltage protection devices, surge arresters and surge-protective devices shall be nonarcing, such as metal-oxide varistor (MOV) sealed type, and surge-protective capacitors shall be of a type designed for specific duty. Enclosures shall be permitted to be of the general-purpose type. Overvoltage ~~Surge~~ protection of types other than described in this paragraph shall be installed in enclosures identified for Class I, Division 1 locations.

502.35 Overvoltage ~~Surge~~ Protection — Class II, Divisions 1 and 2.
Overvoltage protection devices, surge arresters and surge-protective devices installed in a Class II, Division 1 location shall be in suitable enclosures. Surge-protective capacitors shall be of a type designed for specific duty.

551.72(E) Connected Devices.
The use of autotransformers shall not be permitted. The use of listed overvoltage and surge protective devices shall be permitted.

Table 490.24 Minimum Clearance of Live Parts

Note: The values given are the minimum clearance for rigid parts and bare conductors under favorable service conditions. They shall be increased for conductor movement or under unfavorable service conditions or wherever space limitations permit. The selection of the associated impulse withstand voltage for a particular system voltage is determined by the characteristics of the overvoltage ~~surge~~ protective equipment.

490.48(A) Design and Documentation.

(12) Overvoltage ~~Surge~~ arresters

620.51(E) Overvoltage ~~Surge~~ Protection.
Overvoltage protection shall be provided where any of the disconnecting means in 620.51 has been designated as supplying an emergency system load, a legally required system load, or a critical operation power system load, ~~listed surge protection shall be provided.~~

645.18 Overvoltage ~~Surge~~ Protection for Critical Operations Data Systems.
Overvoltage ~~Listed surge~~ protection shall be provided for critical operations data systems.

670.6 Surge Protection.
Industrial machinery with safety interlock control devices not effectively protected from voltage surges on the incoming supply circuit shall have overvoltage ~~surge~~ protection installed.

694.7(D) Overvoltage Protection ~~Surge Protective Devices (SPD).~~
Overvoltage protection ~~A surge protective device~~ shall be installed between a wind electric system and any loads served by the premises electrical system. The ~~surge~~ protective device shall be permitted to be a VSGR, or a Type 3 SPD on the circuit serving a wind electric system, or a Type 2 SPD located anywhere on the load side of the service disconnect. Overvoltage ~~Surge~~ protective devices shall be installed in accordance with Part II of Article 242.

695.15 Overvoltage ~~Surge~~ Protection.
Overvoltage ~~A listed surge~~ protection ~~device~~ shall be provided for ~~installed in or on~~ the fire pump controller.

700.8 Overvoltage ~~Surge~~ Protection.
Overvoltage protection ~~A listed SPD~~ shall be provided-installed in ~~or on~~ for all emergency systems switchboards and panelboards.

708.20(D) Overvoltage ~~Surge~~ Protection ~~Devices~~.

Surge protection devices shall be provided at all facility distribution voltage levels

Public Input No. 3767-NFPA 70-2020 [Section No. 502.35]

502.35 ~~Surge Protection~~ 35 Overvoltage Protection — Class II, Divisions 1 and 2.

Surge arresters and surge-protective devices installed in a Class II, Division 1 location shall be in suitable enclosures. Surge-protective capacitors shall be of a type designed for specific duty.

Statement of Problem and Substantiation for Public Input

The purpose of this public input is to correlate and harmonize all of the current sections of the code where “overvoltage protection” is required by:

1. Changing the section titles to “Overvoltage Protection” to properly correlate with Article 242.

2. Correcting the product description to “listed surge-protective device (SPD)” which is defined in Article 100 and correlates with Article 242.

3. Adding a pointer to “Part II. of Article 242” to ensure compliance with all of the requirements for SPDs are met when complying with the rule.

This public input is one of eleven correlating public inputs covering Sections 230.67, 501.35, 502.35, 620.51(E), 645.18, 670.6, 694.7(D), 695.15, 700.8, 708.20(D), and Informative Annex G.

Submitter Information Verification

Submitter Full Name: Megan Hayes
Organization: Nema
Street Address:
City:
State:
Zip:
Submittal Date: Wed Sep 09 12:07:10 EDT 2020
Committee: NEC-P14

Committee Statement

Resolution: CMP-14 understands that this change is being considered by CMP-10 and will revisit this recommendation during the Second Draft phase of the process. There does not appear to be any recommended changes to (2) and (3).

Public Input No. 193-NFPA 70-2019 [Section No. 502.150]

502.150 Signaling, Alarm, Remote-Control, and Communications Systems; and Meters, Instruments, and Relays.

Informational Note: See ~~Article~~ Articles 800 & 805 for rules governing the installation of communications circuits.

(A) Class II, Division 1.

In Class II, Division 1 locations, signaling, alarm, remote-control, and communications systems; and meters, instruments, and relays shall comply with 502.150(A)(1) through (A)(3).

(1) Contacts.

Switches, circuit breakers, relays, contactors, fuses and current-breaking contacts for bells, horns, howlers, sirens, and other devices in which sparks or arcs may be produced shall be provided with enclosures identified for the location.

Exception: Where current-breaking contacts are immersed in oil or where the interruption of current occurs within a chamber sealed against the entrance of dust, enclosures shall be permitted to be of the general-purpose type.

(2) Resistors and Similar Equipment.

Resistors, transformers, choke coils, rectifiers, thermionic tubes, and other heat-generating equipment shall be provided with enclosures identified for the location.

Exception: Where resistors or similar equipment are immersed in oil or enclosed in a chamber sealed against the entrance of dust, enclosures shall be permitted to be of the general-purpose type.

(3) Rotating Machinery.

Motors, generators, and other rotating electrical machinery shall comply with 502.125(A).

(B) Class II, Division 2.

In Class II, Division 2 locations, signaling, alarm, remote-control, and communications systems; and meters, instruments, and relays shall comply with 502.150(B)(1) through (B)(4).

(1) Contacts.

Contacts shall comply with 502.150(A)(1) or shall be installed in enclosures that are dusttight or otherwise identified for the location.

Exception: In nonincendive circuits, enclosures shall be permitted to be of the general-purpose type.

(2) Transformers and Similar Equipment.

The windings and terminal connections of transformers, choke coils, and similar equipment shall comply with 502.120(B)(2).

(3) Resistors and Similar Equipment.

Resistors, resistance devices, thermionic tubes, rectifiers, and similar equipment shall comply with 502.120(B)(3).

(4) Rotating Machinery.

Motors, generators, and other rotating electrical machinery shall comply with 502.125(B).

(5) Connections.

To facilitate replacements, process control instruments shall be permitted to be connected through flexible cord, attachment plug, and receptacle, provided that all of the following conditions apply:

(1) Attachment plug and receptacle are listed for use in Class II, Division 2 locations, and listed for use with flexible cords.

Exception No. 1: A Class II, Division 2 listing is not required if the circuit involves only nonincendive field wiring.

Exception No. 2: In industrial establishments where the conditions of maintenance and supervision ensure that only qualified individuals service the installation, the Class II, Division 2 listing is not required when the requirements of list items 502.150(B)(5)(2), (B)(5)(3), and (B)(5)(4) are satisfied and the receptacle carries a label warning against plugging or unplugging when energized.

(2) The flexible cord does not exceed 900 mm (3 ft), is of a type listed for extra-hard usage, or if listed for hard usage is protected by location.

(3) Only necessary receptacles are provided.

(4) Unless the attachment plug and receptacle are interlocked mechanically or electrically, or otherwise designed so that they cannot be separated when the contacts are energized, and the contacts cannot be energized when the plug and socket outlet are separated, a switch complying with 502.115(B) shall be provided so that the attachment plug or receptacle is not depended on to interrupt current.

Exception: The switch shall not be required if the circuit is nonincendive field wiring.

Statement of Problem and Substantiation for Public Input

The 2020 NEC introduced Article 800, General Requirements for Communications Systems. This PI corrects an apparent omission by adding reference to Article 800.

Submitter Information Verification

Submitter Full Name: Stanley Kaufman
Organization: CableSafe, Inc./OFS
Affiliation: PLASTICS Industry Association (PLASTICS)
Street Address:
City:
State:
Zip:
Submittal Date: Fri Dec 20 09:57:47 EST 2019
Committee: NEC-P14

Committee Statement

Resolution: The recommendation does not comply with the NEC Style Manual in respect to referencing entire articles.

Public Input No. 2705-NFPA 70-2020 [Section No. 502.150(A)(1)]

(1) Contacts. Enclosures containing contacts shall comply with 502.150(A)(1)(a) or 502.150(A)(1)(b).

(a). Switches, circuit breakers, relays, contactors, fuses and current-breaking contacts for bells, horns, howlers, sirens, and other devices in which sparks or arcs may be produced shall be provided with enclosures identified for the location.

~~Exception: Where~~

(b) Where current-breaking contacts are immersed in oil or where the interruption of current occurs within a chamber sealed against the entrance of dust, enclosures shall be permitted to be of the general-purpose type.

Statement of Problem and Substantiation for Public Input

The exception is easily converted to positive text adding clarity to the requirement for contacts.

Submitter Information Verification

Submitter Full Name: John Simmons
Organization: Florida East Coast JATC
Street Address:
City:
State:
Zip:
Submittal Date: Fri Aug 28 18:40:48 EDT 2020
Committee: NEC-P14

Committee Statement

Resolution: FR-8501-NFPA 70-2021

Statement: The exception has been converted to positive language for compliance with the direction in the NEC Style Manual to minimize the use of exceptions.

Public Input No. 2706-NFPA 70-2020 [Section No. 502.150(A)(2)]

(2) Resistors and Similar Equipment. Enclosures containing resistors shall comply with 502.150(A)(2)(a) or 502.150(A)(2)(b)

(a) Resistors, transformers, choke coils, rectifiers, thermionic tubes, and other heat-generating equipment shall be provided with enclosures identified for the location.

~~Exception: Where~~

(b) W here resistors or similar equipment are immersed in oil or enclosed in a chamber sealed against the entrance of dust, enclosures shall be permitted to be of the general-purpose type.

Statement of Problem and Substantiation for Public Input

The exception is easily converted to positive text and adds clarity to the section.

Submitter Information Verification

Submitter Full Name: John Simmons
Organization: Florida East Coast JATC
Street Address:
City:
State:
Zip:
Submittal Date: Fri Aug 28 18:54:15 EDT 2020
Committee: NEC-P14

Committee Statement

Resolution: FR-8502-NFPA 70-2021
Statement: The exception has been converted to positive language for compliance with the direction in the NEC Style Manual to minimize the use of exceptions.

Public Input No. 2707-NFPA 70-2020 [Section No. 502.150(B)(1)]

(1) Contacts. Enclosures for contacts shall comply with 502.150(B)(1)(a) or 502.150(B)(1)(b).

(a) Contacts shall comply with 502.150(A)(1) or shall be installed in enclosures that are dusttight or otherwise identified for the location.

~~Exception:~~ ~~In~~

-

~~(b)~~ ~~Enclosures in~~ ~~nonincendive circuits~~

~~, enclosures~~

~~shall be permitted to be of the general-purpose type.~~

Statement of Problem and Substantiation for Public Input

The exception is easily converted to positive text adding clarity to the section.

Submitter Information Verification

Submitter Full Name: John Simmons
Organization: Florida East Coast JATC
Street Address:
City:
State:
Zip:
Submittal Date: Fri Aug 28 19:00:57 EDT 2020
Committee: NEC-P14

Committee Statement

Resolution: FR-8503-NFPA 70-2021

Statement: The exception has been converted to positive language for compliance with the direction in the NEC Style Manual to minimize the use of exceptions.

Public Input No. 2504-NFPA 70-2020 [Section No. 502.150(B)(5)]

(5) Connections.

To facilitate replacements, process control instruments shall be permitted to be connected through flexible cord, attachment plug, and receptacle, provided that all of the following conditions apply:

(1) Attachment plug and receptacle are listed for use in Class II, Division 2 locations, and listed for use with flexible cords.

Exception No. 1: A Class II, Division 2 listing is not required if the circuit involves only nonincendive field wiring.

Exception No. 2: In industrial establishments ~~where the conditions of maintenance and supervision ensure that only qualified individuals service the installation, the~~ Class II, Division 2 listing is not required when the requirements of list items 502.150(B)(5)(2), (B)(5)(3), and (B)(5)(4) are satisfied and the receptacle carries a label warning against plugging or unplugging when energized.

(2) The flexible cord does not exceed 900 mm (3 ft), is of a type listed for extra-hard usage, or if listed for hard usage is protected by location.

(3) Only necessary receptacles are provided.

(4) Unless the attachment plug and receptacle are interlocked mechanically or electrically, or otherwise designed so that they cannot be separated when the contacts are energized, and the contacts cannot be energized when the plug and socket outlet are separated, a switch complying with 502.115(B) shall be provided so that the attachment plug or receptacle is not depended on to interrupt current.

Exception: The switch shall not be required if the circuit is nonincendive field wiring.

Statement of Problem and Substantiation for Public Input

The term industrial establishment is used throughout Articles 500 through 506. Where the term is used the following text is added: "restricted access where the conditions of maintenance and engineering supervision ensure that only qualified persons install and service the installation. By creating a definition, the added text can be removed from each location where the term appears. This will remove clutter from the section or subdivision where the term appears which will improve readability.

The proposed definition adds the requirement for the AHJ to approve the building for industrial use. This will help to add some consistency to the use of the less restrictive requirements for industrial establishments.

Related Public Inputs for This Document

Related Input	Relationship
Public Input No. 2494-NFPA 70-2020 [New Definition after Definition: Inherently Safe Optical Ra...]	

Submitter Information Verification

Submitter Full Name: John Simmons

Organization: Florida East Coast JATC

Street Address:
City:
State:
Zip:
Submittal Date: Sun Aug 23 16:39:22 EDT 2020
Committee: NEC-P14

Committee Statement

Resolution: The recommendation is predicated on the inclusion of a new definition of Industrial Establishments in Article 100. This requires action by CMP-1 during the First Draft phase of the revision process. If accepted, comments will be submitted for action during the Second Draft phase of the revision process.

Public Input No. 4428-NFPA 70-2020 [Section No. 502.150 [Excluding any Sub-Sections]]

Informational Note: See ~~Article~~ 805.1 for rules governing the installation of communications circuits.

Statement of Problem and Substantiation for Public Input

Section 4.1.4 of the 2020 NEC(r) Style Manual prohibits referencing an entire article, with the exception of Article 100. As such, it is proposed to instead point the user to the scope statement of Article 805 where it is clearly explained what is covered in that respective article, without changing the intent of the Code, here.

Submitter Information Verification

Submitter Full Name: Richard Holub
Organization: The DuPont Company, Inc.
Street Address:
City:
State:
Zip:
Submittal Date: Thu Sep 10 12:54:05 EDT 2020
Committee: NEC-P14

Committee Statement

Resolution: FR-9240-NFPA 70-2021
Statement: The informational note is deleted as it does not meet the requirements of NEC® Style Manual Section 4.1.4. In addition, it is not placed correctly in accordance with 3.1.3 of the NEC Style Manual.

Public Input No. 2518-NFPA 70-2020 [New Section after 503.1]

503.4 Documentation

All areas designated as hazardous (classified) locations shall be properly documented. This documentation shall be available to those authorized to design, install, inspect, maintain, or operate electrical equipment at the location.

Statement of Problem and Substantiation for Public Input

The requirement for documentation is found in 500.4 but the requirement is important enough to be included in each Article; 501, 502, 503, 505, and 506. The requirement should be consistent in all five locations.

Related Public Inputs for This Document

Related Input	Relationship
Public Input No. 2513-NFPA 70-2020 [Section No. 505.4]	
Public Input No. 2510-NFPA 70-2020 [New Section after 501.1]	
Public Input No. 2511-NFPA 70-2020 [New Section after 502.1]	
Public Input No. 2510-NFPA 70-2020 [New Section after 501.1]	
Public Input No. 2511-NFPA 70-2020 [New Section after 502.1]	
Public Input No. 2513-NFPA 70-2020 [Section No. 505.4]	

Submitter Information Verification

Submitter Full Name: John Simmons
Organization: Florida East Coast JATC
Street Address:
City:
State:
Zip:
Submittal Date: Sun Aug 23 20:03:08 EDT 2020
Committee: NEC-P14

Committee Statement

Resolution: The documentation requirements found in 500.4 apply to Articles 501, 502 and 503. They are restated in Articles 505 and 506 as they are not covered by Article 500.

Public Input No. 4431-NFPA 70-2020 [Section No. 503.1]

503.1 Scope.

~~Article~~ ~~503~~ - This article covers the requirements for electrical and electronic equipment and wiring for all voltages in Class III, Division 1 and 2 locations where fire or explosion hazards may exist due to ignitible fibers/flyings.

Statement of Problem and Substantiation for Public Input

Section 4.1.4 of the 2020 NEC(r) Style Manual prohibits referencing an entire article, with the exception of Article 100. Changing to "This article" accomplishes the requirement without changing the intent of the Code.

Related Public Inputs for This Document

Related Input	Relationship
Public Input No. 4417-NFPA 70-2020 [Section No. 501.1]	
Public Input No. 4420-NFPA 70-2020 [Section No. 502.1]	

Submitter Information Verification

Submitter Full Name: Richard Holub
Organization: The DuPont Company, Inc.
Street Address:
City:
State:
Zip:
Submittal Date: Thu Sep 10 12:56:51 EDT 2020
Committee: NEC-P14

Committee Statement

Resolution: FR-8743-NFPA 70-2021
Statement: Section 4.1.4 of the 2020 NEC Style Manual prohibits references to an entire article, with the exception of Article 100. Changing to "This article" accomplishes the requirement without changing the intent of the Code.

Public Input No. 3751-NFPA 70-2020 [Section No. 503.10(A)]

(A) Class III, Division 1.

(1) General.

In Class III, Division 1 locations, the following wiring methods shall be permitted:

(1) Rigid metal conduit (Type RMC), Type PVC conduit, Type RTRC conduit, intermediate metal conduit (Type IMC), electrical metallic tubing (EMT), dusttight wireways, or Type MC or MI cable with listed termination fittings.

(2) Types PLTC and PLTC-ER cable in accordance with Part II or III of Article 725, including installation in cable tray systems. The cable shall be terminated with listed fittings. Type PLTC-ER cable shall include an equipment grounding conductor in addition to a drain wire that might be present.

(3) Types ITC and ITC-ER cable as permitted in 727.4 and terminated with listed fittings. Type ITC-ER cable shall include an equipment grounding conductor in addition to a drain wire.

(4) Type MV, TC, or TC-ER cable, including installation in cable tray systems. Type TC-ER cable shall include an equipment grounding conductor in addition to a drain wire that might be present. The cable shall be terminated with listed fittings.

(5) Cablebus.

(6) In industrial establishments with restricted public access, where the conditions of maintenance and supervision ensure that only qualified persons service the installation, listed Type P cable with metal braid armor, with an overall jacket, terminated with fittings listed for the location and installed in accordance with 337.10. When installed in ladder ventilated trough, or ventilated channel cable trays, cables shall be installed in a single layer, with a space not less than the larger cable diameter betwen the two adjacent cables, unless otherwise protected against dust buildup resulting in increased heat.

Informational Note: For information on construction, testing, and marking of cable fittings, see ANSI/UL 2225-2013, Cables and Cable-Fittings for Use in Hazardous (Classified) Locations.

(2) Boxes and Fittings.

All boxes and fittings shall be dusttight.

(3) Flexible Connections.

Where necessary to employ flexible connections, one or more of the following shall be permitted:

(1) Dusttight flexible connectors

(2) Liquidtight flexible metal conduit (Type LFMC) with listed fittings

(3) Liquidtight flexible nonmetallic conduit (Type LFNC) with listed fittings

(4) Interlocked armor Type MC cable having an overall jacket of suitable polymeric material and installed with listed dusttight termination fittings

(5) Flexible cord in compliance with 503.140

Informational Note: See 503.30(B) for grounding requirements where flexible conduit is used.

(6) For elevator use, an identified elevator cable of Type EO, ETP, or ETT, shown under the “use” column in Table 400.4 for “hazardous (classified) locations” and terminated with listed dusttight fittings

(4) Nonincendive Field Wiring.

Nonincendive field wiring shall be permitted using any of the wiring methods permitted for unclassified locations. Nonincendive field wiring systems shall be installed in accordance with the control drawing(s). Simple apparatus, not shown on the control drawing, shall be permitted in a nonincendive field wiring circuit, provided the simple apparatus does not interconnect the nonincendive field wiring circuit to any other circuit.

Informational Note: Simple apparatus is defined in Article 100 Part III.

Separate nonincendive field wiring circuits shall be installed in accordance with one of the following:

(1) In separate cables

(2) In multiconductor cables where the conductors of each circuit are within a grounded metal shield

(3) In multiconductor cables where the conductors of each circuit have insulation with a minimum thickness of 0.25 mm (0.01 in.)

Statement of Problem and Substantiation for Public Input

Type P Cable with metal braid armor, with an overall jacket is permitted as a general wiring method for Class II, Division 1 when installed in industrial establishments with restricted public access, where the conditions of maintenance and supervision ensure that only qualified persons service the installation. Type P Cable should be permitted as a general wiring method in Class III, Division 1.

Submitter Information Verification

Submitter Full Name: Megan Hayes
Organization: Nema
Street Address:
City:
State:
Zip:
Submittal Date: Wed Sep 09 11:50:20 EDT 2020
Committee: NEC-P14

Committee Statement

Resolution: FR-8504-NFPA 70-2021

Statement: Type P cable has been added as an acceptable wiring method in Class III, Division 1 locations.

Public Input No. 1976-NFPA 70-2020 [Section No. 503.10(A)(1)]

(1) General.

In Class III, Division 1 locations, the following wiring methods shall be permitted:

(1) Rigid metal conduit (Type RMC), Type PVC conduit, Type RTRC conduit, intermediate metal conduit (Type IMC), electrical metallic tubing (EMT), dusttight wireways, or Type MC or MI cable with listed termination fittings.

(2) Types PLTC and PLTC-ER cable in accordance with Part II or III of Article 725, including installation in cable tray systems. The cable shall be terminated with listed fittings. Type PLTC-ER cable shall include an equipment grounding conductor in addition to a drain wire that might be present.

(3) Types ITC and ITC-ER cable as permitted in 727.4 and terminated with listed fittings. Type ITC-ER cable shall include an equipment grounding conductor in addition to a drain wire.

(4) Type MV, TC, or TC-ER cable, including installation in cable tray systems. Type TC-ER cable shall include an equipment grounding conductor in addition to a drain wire that might be present. The cable shall be terminated with listed fittings.

(5) Cablebus.

(6) In industrial establishments with restricted public access, where the conditions of maintenance and supervision ensure that only qualified persons service the installation, listed Type P cable with metal braid armor, with an overall jacket, terminated with fittings listed for the location and installed in accordance with 337.10. When installed in ladder, ventilated trough, or ventilated channel cable trays, cables shall be installed in a single layer, with a space not less than the larger cable diameter between the two adjacent cables, unless otherwise protected against dust buildup resulting in increased heat.

Informational Note No. 1: For information on construction, testing, and marking of Type P cable, see ANSI/UL 1309-2017, Marine Shipboard Cable.

Informational Note No. 2: For information on construction, testing, and marking of cable fittings, see ANSI/UL 2225-2013, Cables and Cable-Fittings for Use in Hazardous (Classified) Locations.

Statement of Problem and Substantiation for Public Input

Type P Cable with metal braid armor, with an overall jacket is permitted as a general wiring method for Class II, Division 1 when installed in industrial establishments with restricted public access, where the conditions of maintenance and supervision ensure that only qualified persons service the installation. Type P Cable should be permitted as a general wiring method in Class III, Division 1.

Submitter Information Verification

Submitter Full Name: Megan Hayes
Organization: Nema
Street Address:
City:
State:
Zip:
Submittal Date: Wed Jul 22 14:59:30 EDT 2020

Committee: NEC-P14

Committee Statement

Resolution: FR-8504-NFPA 70-2021

Statement: Type P cable has been added as an acceptable wiring method in Class III, Division 1 locations.

Public Input No. 1370-NFPA 70-2020 [Section No. 503.10(A)(3)]

(3) Flexible Connections.

Where necessary to employ flexible connections, one or more of the following shall be permitted:

(1) Dusttight flexible connectors

(2) Liquidtight flexible metal conduit (Type LFMC) with listed fittings

(3) Liquidtight flexible nonmetallic conduit (Type LFNC) with listed fittings

(4) Interlocked armor Type MC cable having an overall jacket of suitable polymeric material and installed with listed dusttight termination fittings

(5) Flexible cord in compliance with 503.140

Informational Note: See 503.30(B) for the required equipment grounding conductor requirements where flexible conduit is used.

(6) For elevator use, an identified elevator cable of Type EO, ETP, or ETT, shown under the "use" column in Table 400.4 for "hazardous (classified) locations" and terminated with listed dusttight fittings

Statement of Problem and Substantiation for Public Input

Text revised to make it clear that we the rule is about the required equipment grounding conductor, not 'grounding.'

Submitter Information Verification

Submitter Full Name: Mike Holt
Organization: Mike Holt Enterprises Inc
Street Address:
City:
State:
Zip:
Submittal Date: Mon Jun 01 20:00:21 EDT 2020
Committee: NEC-P14

Committee Statement

Resolution: The rule in 503.10(A)(3) is not about the equipment grounding conductor. The concern is the effective ground fault path which needs to be maintained. This path can be composed of equipment grounding conductors, bonding conductors, and bonding jumpers. The term grounded is consistent with the requirements found in 250.4(A) Grounded Systems.

Public Input No. 1896-NFPA 70-2020 [Section No. 503.10(A)(3)]

(3) Flexible Connections.

Where necessary to employ flexible connections, one or more of the following shall be permitted:

(1) Dusttight flexible connectors

(2) Liquidtight flexible metal conduit (Type LFMC) with listed fittings

(3) Liquidtight flexible nonmetallic conduit (Type LFNC) with listed fittings

(4) Interlocked armor Type MC cable~~ having an overall jacket of suitable polymeric material and installed with listed dusttight termination fittings~~

(5) Flexible cord in compliance with 503.140

Informational Note: See 503.30(B) for grounding requirements where flexible conduit is used.

(6) For elevator use, an identified elevator cable of Type EO, ETP, or ETT, shown under the "use" column in Table 400.4 for "hazardous (classified) locations" and terminated with listed dusttight fittings

Statement of Problem and Substantiation for Public Input

Type MC cable without an outer jacket is allowed in Class III, Division 1 locations via 503.10(A)(1)(1). It seems rather absurd to require an outer jacket and special fittings if I am using the cable simply due to flexibility being desired.

Submitter Information Verification

Submitter Full Name: Ryan Jackson
Organization: Ryan Jackson
Street Address:
City:
State:
Zip:
Submittal Date: Tue Jul 14 11:52:49 EDT 2020
Committee: NEC-P14

Committee Statement

Resolution: For installations where flexibility is required, the outer jacket provides additional protection against potential arcing between broken corrugations.

Public Input No. 1977-NFPA 70-2020 [Section No. 503.10(A)(3)]

(3) Flexible Connections.

Where necessary to employ flexible connections, one or more of the following shall be permitted:

(1) Dusttight flexible connectors

(2) Liquidtight flexible metal conduit (Type LFMC) with listed fittings

(3) Liquidtight flexible nonmetallic conduit (Type LFNC) with listed fittings

(4) Interlocked armor Type MC cable having an overall jacket of suitable polymeric material and installed with listed dusttight termination fittings

(5) Flexible cord in compliance with 503.140

Informational Note: See 503.30(B) for grounding requirements where flexible conduit is used.

(6) For elevator use, an identified elevator cable of Type EO, ETP, or ETT, shown under the "use" column in Table 400.4 for "hazardous (classified) locations" and terminated with listed dusttight fittings

(7) In industrial establishments with restricted public access, where the conditions of maintenance and supervision ensure that only qualified persons service the installation, listed Type P cable with metal braid armor, with an overall jacket, terminated with fittings listed for the location and installed in accordance with 337.10

Informational Note: For information on construction, testing, and marking of Type P cable, see ANSI/UL 1309-2017 Marine Shipboard Cable.

Statement of Problem and Substantiation for Public Input

Type P Cable with metal braid armor, with an overall jacket is permitted as a flexible wiring method for Class II, Division 1 when installed in industrial establishments with restricted public access, where the conditions of maintenance and supervision ensure that only qualified persons service the installation. Type P Cable should be permitted as a flexible wiring method in Class III, Division 1.

Submitter Information Verification

Submitter Full Name: Megan Hayes
Organization: Nema
Street Address:
City:
State:
Zip:
Submittal Date: Wed Jul 22 15:12:45 EDT 2020
Committee: NEC-P14

Committee Statement

Resolution: FR-8480-NFPA 70-2021

Statement: Type P cable has been added as an acceptable flexible wiring method in Class III, Division 1 locations. The existing informational note has been deleted and the concept of bonding has been added to (2).

Public Input No. 1982-NFPA 70-2020 [Section No. 503.10(A)(3)]

(3) Flexible Connections.

Where necessary to employ flexible connections, one or more of the following shall be permitted:

(1) Dusttight flexible connectors

(2) Liquidtight flexible metal conduit (Type LFMC) with listed fittings and bonded per 503.30(B)

(3) Liquidtight flexible nonmetallic conduit (Type LFNC) with listed ~~fittings~~ fittings

(4) Interlocked armor Type MC cable having an overall jacket of suitable polymeric material and installed with listed dusttight termination fittings

(5) Flexible cord in compliance with 503.~~140~~

~~Informational Note: See 503.30(B) for grounding requirements where flexible conduit is used.~~

140

(6) For elevator use, an identified elevator cable of Type EO, ETP, or ETT, shown under the "use" column in Table 400.4 for "hazardous (classified) locations" and terminated with listed dusttight fittings

Statement of Problem and Substantiation for Public Input

The informational note refers the reader to 503.30(B) for grounding for flexible metal conduit is used. The note is under list item 5 flexible cord. Informational notes are required to be placed directly under the rule they apply to. Additionally 503.30(B) provides bonding requirements for liquidtight flexible metal conduit and not grounding requirements. Moving the note to list item 2 puts the reference to the bonding requirement where it belongs (LFMC) and turns the note into code text.

Related Public Inputs for This Document

Related Input	Relationship
Public Input No. 1983-NFPA 70-2020 [Section No. 502.10(A)(2)]	
Public Input No. 1984-NFPA 70-2020 [Section No. 501.10(B)(2)]	
Public Input No. 1983-NFPA 70-2020 [Section No. 502.10(A)(2)]	
Public Input No. 1984-NFPA 70-2020 [Section No. 501.10(B)(2)]	

Submitter Information Verification

Submitter Full Name: John Simmons
Organization: Florida East Coast JATC
Street Address:
City:
State:

Zip:

Submittal Date: Wed Jul 22 17:42:53 EDT 2020

Committee: NEC-P14

Committee Statement

Resolution: FR-8480-NFPA 70-2021

Statement: Type P cable has been added as an acceptable flexible wiring method in Class III, Division 1 locations. The existing informational note has been deleted and the concept of bonding has been added to (2).

Public Input No. 3761-NFPA 70-2020 [Section No. 503.10(A)(3)]

(3) Flexible Connections.

Where necessary to employ flexible connections, one or more of the following shall be permitted:

(1) Dusttight flexible connectors

(2) Liquidtight flexible metal conduit (Type LFMC) with listed fittings

(3) Liquidtight flexible nonmetallic conduit (Type LFNC) with listed fittings

(4) Interlocked armor Type MC cable having an overall jacket of suitable polymeric material and installed with listed dusttight termination fittings

(5) Flexible cord in compliance with 503.140

Informational Note: See 503.30(B) for grounding requirements where flexible conduit is used.

(6) For elevator use, an identified elevator cable of Type EO, ETP, or ETT, shown under the "use" column in Table 400.4 for "hazardous (classified) locations" and terminated with listed dusttight fittings

(7) In industrial establishments with restricted public access, where the conditions of maintenance and supervision ensure that only qualified persons service the installation, listed Type P cable with metal braid armor, with an overall jacket, terminated with fittings listed for the location and installed in accordance with 337.10.

Statement of Problem and Substantiation for Public Input

Type P Cable with metal braid armor, with an overall jacket is permitted as a flexible wiring method for Class II, Division 1 when installed in industrial establishments with restricted public access, where the conditions of maintenance and supervision ensure that only qualified persons service the installation. Type P Cable should be permitted as a flexible wiring method in Class III, Division 1.

Submitter Information Verification

Submitter Full Name: Megan Hayes
Organization: Nema
Street Address:
City:
State:
Zip:
Submittal Date: Wed Sep 09 11:59:17 EDT 2020
Committee: NEC-P14

Committee Statement

Resolution: FR-8480-NFPA 70-2021

Statement: Type P cable has been added as an acceptable flexible wiring method in Class III, Division 1 locations. The existing informational note has been deleted and the concept of bonding has been added to (2).

Public Input No. 2157-NFPA 70-2020 [Section No. 503.10(B)]

(B)

~~Class III~~

Class III , Division 2.

~~In Class III, Division 2 locations, the wiring method~~

Wiring methods in Class III, Division 2 must comply with 503.10(B)(1) or 503.10(B)(2).

(1) The wiring shall comply with 503.10(A)

~~. Exception:~~

, or

(2) In sections, compartments, or areas that do not contain machinery and are used solely for storage

~~and containing no machinery~~

, open wiring on insulators shall be permitted

~~where installed in accordance with Article 398 , but only on condition that protection as required by 398.15(C) be provided where conductors are not run in roof spaces and are well out of reach of sources of physical damage.~~

under the following conditions:

(1) The open wiring shall be installed per Article 398, and

(2) The wiring is installed in roof spaces well out of the reach of sources of physical damage or protected as required by 398.15(C).

Statement of Problem and Substantiation for Public Input

The proposal changes the exception to positive language and makes editorial changes to existing text to add clarity.

Submitter Information Verification

Submitter Full Name: John Simmons
Organization: Florida East Coast JATC
Street Address:
City:
State:
Zip:
Submittal Date: Tue Aug 04 15:22:03 EDT 2020
Committee: NEC-P14

Committee Statement

Resolution: FR-8485-NFPA 70-2021

Statement: The exception has been converted to positive language for compliance with the direction in the NEC Style Manual to minimize the use of exceptions. The reference to an entire article has been revised for compliance with the NEC Style Manual.

Public Input No. 1140-NFPA 70-2020 [Section No. 503.30]

503.30 Grounding and Bonding — Class III, Divisions 1 and 2.

Regardless of the voltage of the electrical system, wiring and equipment in Class III, Division 1 and 2 locations shall be grounded as specified in Article 250 and with the following additional requirements in 503.30(A) and (B).

(A) Bonding.

~~The locknut-bushing and double-locknut types of contacts~~ Standard locknuts shall not be depended on for bonding purposes ~~, but bonding jumpers with proper fittings or other approved means of bonding~~ . Listed devices such as bonding-type locknuts or bushing with bonding jumpers shall be used. Such means of bonding shall apply to all intervening raceways, fittings, boxes, enclosures, and so forth, between Class III locations and the point of grounding for service equipment or point of grounding of a separately derived system.

Exception: The specific bonding means shall only be required to the nearest point where the grounded circuit conductor and the grounding electrode conductor are connected together on the line side of the building or structure disconnecting means as specified in 250.32(B) if the branch-circuit overcurrent protection is located on the load side of the disconnecting means.

(B) Types of Equipment Bonding Conductors.

Liquidtight flexible metal conduit shall include an equipment bonding jumper or equipment grounding conductor of the wire type in compliance with 250.102.

Exception: In Class III, Division 1 and 2 locations, the bonding jumper shall be permitted to be deleted where all of the following conditions are met:

(1) Listed liquidtight flexible metal conduit 1.8 m (6 ft) or less in length, with fittings listed for grounding, is used.

(2) Overcurrent protection in the circuit is limited to 10 amperes or less.

(3) The load is not a power utilization load.

Statement of Problem and Substantiation for Public Input

The current language uses terms that are vague and unenforceable ("proper fittings"). This PI borrows language from 250.92, which is the intent of this requirement. It also allows for a an equipment grounding conductor of the wire type to be installed in lieu of a bonding jumper. The original proposal from 2011 was to clarify that the FMC should not be relied upon as the sole effective ground-fault current path, and installing an EGC satisfies that criteria.

See related PIs for 501.30 and 502.30

Related Public Inputs for This Document

Related Input	Relationship
Public Input No. 1138-NFPA 70-2020 [Section No. 501.30]	

Submitter Information Verification

Submitter Full Name: Ryan Jackson

Organization: Ryan Jackson
Street Address:
City:
State:
Zip:
Submittal Date: Mon May 18 16:22:18 EDT 2020
Committee: NEC-P14

Committee Statement

Resolution: A first revision has revised the entire section. The language concerning locknut/bushing and double locknut connections remains in 503.30. The intent of requiring bonding jumpers is to reduce the chance of arcing which may occur with mechanical devices (locknuts and bushings) which may loosen. The proposed listing requirement is unnecessary as Article 250 provides those requirements. The proposed addition of the term equipment grounding conductor in (B) does not meet the intent of the subdivision.

Public Input No. 2126-NFPA 70-2020 [Section No. 503.30]

503.30 Grounding and Bonding — Class III, Divisions 1 and 2.

~~Regardless of the voltage of the electrical system, wiring and~~
All electrical equipment in

~~Class III~~
Class III ,

~~Division~~
Divisions 1 and 2

~~locations~~
shall be grounded

~~as specified~~
and bonded as required in Article 250

~~and with the following additional requirements in 503~~

.

~~30(A) and (B).~~

~~**(A)** Bonding.~~

~~The locknut-bushing and double-locknut types of contacts shall not be depended on for bonding purposes, but bonding jumpers with proper fittings or other approved means of bonding shall be used. Such means of bonding shall apply to all intervening raceways, fittings, boxes, enclosures, and so forth, between Class III locations and the point of grounding for service equipment or point of grounding of a separately derived system.~~

~~*Exception: The specific bonding means shall only be required to the nearest point where the grounded circuit conductor and the grounding electrode conductor are connected together on the line side of the building or structure disconnecting means as specified in 250.32(B) if the branch-circuit overcurrent protection is located on the load side of the disconnecting means.*~~

~~**(B)** Types of Equipment Bonding Conductors.~~

~~Liquidtight flexible metal conduit shall include an equipment bonding jumper of the wire type in compliance with 250.102 .~~

~~*Exception: In Class III, Division 1 and 2 locations, the bonding jumper shall be permitted to be deleted where all of the following conditions are met:*~~

~~*(1) Listed liquidtight flexible metal conduit 1.8 m (6 ft) or less in length, with fittings listed for grounding, is used.*~~

~~*(2) Overcurrent protection in the circuit is limited to 10 amperes or less.*~~

~~*(3) The load is not a power utilization load.*~~

Informational Note: See 250.100 for specific grounding and bonding requirements for hazardous (classified) locations.

Statement of Problem and Substantiation for Public Input

This is a companion proposal with one submitted to revise 250.100.

Related Public Inputs for This Document

Related Input	Relationship
Public Input No. 2127-NFPA 70-2020 [Section No. 505.25]	
Public Input No. 2129-NFPA 70-2020 [Section No. 348.60]	
Public Input No. 2130-NFPA 70-2020 [Section No. 350.60]	
Public Input No. 2131-NFPA 70-2020 [Section No. 506.25]	
Public Input No. 2132-NFPA 70-2020 [Section No. 250.118]	

Submitter Information Verification

Submitter Full Name: Paul Guidry
Organization: Fluor Enterprises, Inc.
Affiliation: Associated Builders and Contractors
Street Address:
City:
State:
Zip:
Submittal Date: Sun Aug 02 12:08:49 EDT 2020
Committee: NEC-P14

Committee Statement

Resolution: The requirements in 503.30 should remain. The first revision to 503.30 addresses the requirements for grounding (Part VI of Article 250) and bonding (Part V of Article 250). This public input was identified as a companion proposal to revise 250.100, this TG cannot assume the action by CMP-5 would support this change.

Public Input No. 2604-NFPA 70-2020 [Section No. 503.30]

503.30 Grounding and Bonding — Class III, Divisions 1 and 2.

Regardless of the voltage of the electrical system, wiring and equipment in ~~Class III~~ Class III , Division 1 and ~~2 locations shall be grounded as specified in Article~~ 250 ~~and~~ 2 locations shall comply with the ~~following additional~~ requirements ~~in~~ of 503.30(A) and 503.30 (B).

(A)

Grounding

Wiring and equipment in Class III, Division 1 and 2 locations shall be grounded as required in Article 250.

(B) Bonding.

The locknut-bushing and double-locknut types of contacts shall not be depended on for bonding purposes, but bonding jumpers with proper fittings or other approved means of bonding shall be used. Such means of bonding shall apply to all intervening raceways, fittings, boxes, enclosures, and ~~so forth~~ other parts of the raceway systems , between Class III locations and the point of grounding for service equipment or point of grounding of a separately derived system.

Exception: The specific bonding means shall only be required to the nearest point where the grounded circuit conductor and the grounding electrode conductor are connected together on the line side of the building or structure disconnecting means as specified in 250.32(B) if the branch-circuit overcurrent protection is located on the load side of the disconnecting means.

(B) Types of Equipment Bonding Conductors.

Liquidtight flexible metal conduit shall include an equipment bonding jumper of the wire type in compliance with 250.102.

Exception: In Class III, Division 1 and 2 locations, the bonding jumper shall be permitted to be deleted where all of the following conditions are met:

(1) Listed liquidtight flexible metal conduit 1.8 m (6 ft) or less in length, with fittings listed for grounding, is used.

(2) Overcurrent protection in the circuit is limited to 10 amperes or less.

(3) The load is not a power utilization load.

Statement of Problem and Substantiation for Public Input

Section 5053.30 provides requirements for grounding and bonding. There is only one requirement for grounding, and it is to comply with Article 250. All the other requirements in the section apply to bonding, however the current text has a bonding requirement under subdivision (B) which is titled "types of equipment grounding conductors". The subdivisions addresse an equipment bonding jumper and refers to 250.102 which does not apply to equipment grounding conductors. A major part of this proposal reorganizes the section and places the grounding requirement in subdivision (A) Grounding, and the bonding requirements in subdivision (B) Bonding. The proposal changed the word "approved" in the phrase "or other approved means" to "identified". The word approved places the responsibility of deciding the suitability of a product on the authority having jurisdiction which in some cases may lead to inconsistency. The term identified provides the AHJ with some guidance in deciding the suitability of the bonding means. Also, the phrase "so forth" is changed to "other parts of raceway systems". The

phrase so forth is ambiguous. The revised wording would add clarity.

Related Public Inputs for This Document

Related Input	Relationship
Public Input No. 2602-NFPA 70-2020 [Section No. 502.30]	
Public Input No. 2599-NFPA 70-2020 [Section No. 501.30]	
Public Input No. 2597-NFPA 70-2020 [Section No. 506.25]	
Public Input No. 2596-NFPA 70-2020 [Section No. 505.25]	
Public Input No. 2606-NFPA 70-2020 [Section No. 501.30]	

Submitter Information Verification

Submitter Full Name: John Simmons
Organization: Florida East Coast JATC
Street Address:
City:
State:
Zip:
Submittal Date: Tue Aug 25 15:33:09 EDT 2020
Committee: NEC-P14

Committee Statement

Resolution: FR-8431-NFPA 70-2021

Statement: A first revision has revised the entire section. The language concerning locknut/bushing and double locknut connections remains in 503.30. The intent of requiring bonding jumpers is to reduce the chance of arcing which may occur with mechanical devices (locknuts and bushings) which may loosen. The proposed listing requirement is unnecessary as Article 250 provides those requirements. The proposed addition of the term equipment grounding conductor in (B) does not meet the intent of the subdivision

Public Input No. 1371-NFPA 70-2020 [Section No. 503.130(D)]

(D) Portable Lighting Equipment.

Portable lighting equipment shall be equipped with handles and protected with substantial guards. Lampholders shall be of the unswitched type with no provision for receiving attachment plugs. There shall be no exposed current-carrying metal parts, and all exposed non–current-carrying metal parts shall be ~~grounded~~ connected to the circuit equipment grounding conductor . In all other respects, portable lighting equipment shall comply with 503.130(A).

Statement of Problem and Substantiation for Public Input

Text revised to make it clear that we the rule is about the connection to the equipment grounding conductor, not 'ground.'

Submitter Information Verification

Submitter Full Name: Mike Holt
Organization: Mike Holt Enterprises Inc
Street Address:
City:
State:
Zip:
Submittal Date: Mon Jun 01 20:02:00 EDT 2020
Committee: NEC-P14

Committee Statement

Resolution: Section 250.4(A) addresses grounded systems. The text in 250.4(A) states that electrical systems that are grounded are connected to the earth to limit certain voltages. subdivision 250.4(A)(3) and (4) address bonding of electrical equipment and electrically conductive materials and make no mention of the equipment grounding conductor. The metal parts are not all connected to the EGC, they may make a metal to metal connection in items such as lamps and be bonded together. They will eventually be made a part of the effective ground fault path. A raceway system without an equipment grounding conductor may never have a direct connection to the EGC, but each length of conduit is bonded to the next piece and the integrity of the effective ground fault path is ensured by the couplings and connectors. The term grounded is the correct term to use.

Public Input No. 4436-NFPA 70-2020 [Section No. 503.150]

503.150 Signaling, Alarm, Remote-Control, and Local Loudspeaker Intercommunications Systems — Class III, Divisions 1 and 2.

Signaling, alarm, remote-control, and local loudspeaker intercommunications systems shall comply with the requirements of ~~Article 503~~ - this article regarding wiring methods, switches, transformers, resistors, motors, luminaires, and related components.

Statement of Problem and Substantiation for Public Input

Section 4.1.4 of the 2020 NEC(r) Style Manual prohibits referencing an entire article, with the exception of Article 100. Changing to "this article" accomplishes the requirement without changing the intent of the Code.

Submitter Information Verification

Submitter Full Name: Richard Holub
Organization: The DuPont Company, Inc.
Street Address:
City:
State:
Zip:
Submittal Date: Thu Sep 10 13:00:28 EDT 2020
Committee: NEC-P14

Committee Statement

Resolution: FR-8744-NFPA 70-2021
Statement: Section 4.1.4 of the 2020 NEC Style Manual prohibits references to an entire article, with the exception of Article 100. Changing to "This article" accomplishes the requirement without changing the intent of the Code.

Public Input No. 4441-NFPA 70-2020 [Section No. 504.1]

504.1 Scope.

This article covers the installation of intrinsically safe (I.S.) apparatus, wiring, and systems for ~~Articles 500 through 516~~ hazardous (classified) locations .

Informational Note: For further information, see ANSI/ISA-RP 12.06.01-2003, *Recommended Practice for Wiring Methods for Hazardous (Classified) Locations Instrumentation — Part 1: Intrinsic Safety*.

Statement of Problem and Substantiation for Public Input

Section 4.1.4 of the 2020 NEC(r) Style Manual prohibits the reference of an entire article, with the exception of Article 100. It is proposed to replace the text "Articles 500 through 516" with the more general language "hazardous (classified) locations" to accomplish the requirements of the style manual without changing the intent of the Code.

Submitter Information Verification

Submitter Full Name: Richard Holub
Organization: The DuPont Company, Inc.
Street Address:
City:
State:
Zip:
Submittal Date: Thu Sep 10 13:03:45 EDT 2020
Committee: NEC-P14

Committee Statement

Resolution: FR-8745-NFPA 70-2021

Statement: Section 4.1.4 of the 2020 NEC Style Manual prohibits the reference of an entire article, with the exception of Article 100. Replacing the text "Articles 500 through 516" with the more general language "hazardous (classified) locations" complies with the requirements of the style manual without changing the intent of the Code.

Public Input No. 2516-NFPA 70-2020 [Section No. 504.30(A)(1)]

(1) In Raceways, Cable Trays, and Cables.

(1) In Raceways, Cable Trays, and Cables. Conductors of intrinsically safe circuits shall not be placed in any raceway, cable tray, or cable with conductors of any nonintrinsically safe circuit

. ~~Exception No. 1:~~

unless they meet the requirements of one of the following:

(1) Where conductors of intrinsically safe circuits are separated from conductors of nonintrinsically safe circuits by a distance of at least

~~50 mm~~

(1) 50 mm (

~~2 in~~

(1) 2 in .) and secured, or by a grounded metal partition

~~or an approved insulating partition.~~

~~Informational Note: No. 20 gauge sheet metal partitions 0.91 mm (0.0359 in.) or thicker are generally considered acceptable.~~

~~Exception No. 2: Where either (1)~~

(1) consisting of a minimum of No. 20 gauge sheet metal 0.91 mm (0.0359 in.) or thicker or an approved insulating partition.

(2) Where either all of the intrinsically safe circuit conductors or

~~(2)~~

(1) all of the nonintrinsically safe circuit conductors are in Type MC cable, Type MI cable, or other approved grounded metal-sheathed or metal- clad

~~cables~~ ~~Exception No. 3:~~

(1) cable where the sheathing or cladding is capable of carrying fault current to ground.

~~Informational Note: Cables meeting the requirements of Articles 330 and 332 are typical of those considered acceptable.~~

(1) Intrinsically safe circuits in a Division 2 or Zone 2 location shall be permitted to be installed in a raceway, cable tray, or cable along with nonincendive field wiring circuits when installed in accordance with 504.30(B) .

~~Exception No. 4:~~

(1) Intrinsically safe circuits passing through a

~~Division 2~~

(1) Division 2 or Zone 2 location to supply apparatus that is located in a

~~Division 1~~

(1) Division 1 , Zone 0 or Zone 1 location shall be permitted to be installed in a raceway, cable tray, or cable along with nonincendive field wiring circuits when installed in accordance with 504.30(B) .

Informational Note:

Nonincendive field wiring circuits are described in 501.10(B)(3) , 502.10(B)(3) , and 503.10(A)(4) .

Statement of Problem and Substantiation for Public Input

Subdivision (A)(1) has a small parent text and four exceptions. The style manual recommends that exceptions be turned to positive language , where possible. The two informational notes contain recommendations which the style manual prohibits. The proposed text of the PI converts the exceptions to positive language and places the informational notes recommendations in the code text of the applicable requirement. Changing the exceptions to positive language improves readability.

Submitter Information Verification

Submitter Full Name: John Simmons
Organization: Florida East Coast JATC
Street Address:
City:
State:
Zip:
Submittal Date: Sun Aug 23 18:46:57 EDT 2020
Committee: NEC-P14

Committee Statement

Resolution: FR-8535-NFPA 70-2021

Statement: The NEC Style Manual states that exceptions should be used sparingly (Section 3.1.4). Section 504.30(A)(1) currently has a requirement containing twenty-three words. The requirement has four exceptions. The four exceptions are rewritten as positive code text and are more effective.The current text also has informational notes that make interpretations and recommendations and are not in compliance with Section 3.1.3 of the NEC Style Manual. They are converted to code language in the proposal. The text in this first revision adds clarity to 504.30(A)(1) and makes no technical revisions.

Public Input No. 2517-NFPA 70-2020 [Section No. 504.30(A)(2)]

(2) Within Enclosures.

(2) Within Enclosures. Conductors of intrinsically safe circuits shall be secured so that any conductor that might come loose from a terminal is unlikely to come into contact with another terminal. The conductors shall be separated from conductors of nonintrinsically safe circuits by one of the methods in (1)

through

through (

4

6).

(1) Separation by at least

50 mm

(1) 50 mm (

2 in

(1) 2 in .) from conductors of any nonintrinsically safe circuits

(2) Separation from conductors of nonintrinsically safe circuits by use of a grounded metal partition 0.

91 mm

(1) 91 mm (0.

0359 in

(1) 0359 in .) or thicker

(2) Separation from conductors of nonintrinsically safe circuits by use of an approved insulating partition that extends to within 1.

5 mm

(1) 5 mm (0.

0625 in

(1) 0625 in .) of the enclosure walls

(2) Where either

(1)

(1) all of the intrinsically safe circuit conductors or

(2)

(1) all of the nonintrinsically safe circuit conductors are in Type MC cable, Type MI cable, or other approved grounded metal-sheathed or metal- clad

cables

(1) cable where the sheathing or cladding is capable of carrying fault current to ground

Informational Note No. 1: Cables meeting the requirements of Articles 330 and 332 are typical of those considered acceptable.

Informational Note No. 2: The use of separate wiring compartments for the intrinsically safe and nonintrinsically safe terminals is a typical method of complying with this requirement.

~~Informational Note No. 3: Physical barriers such as grounded metal partitions or approved insulating partitions~~

(1) ~~.~~

(2) ~~Separation of the intrinsically safe and nonintrinsically safe terminals by installing the intrinsically safe terminals in a wiring compartment for only intrinsically safe terminals and installing the nonintrinsically safe terminals in a separate dedicated wiring compartment.~~

(3) ~~Provide p hysical barriers consisting of grounded metal partitions, approved insulating partitions, or approved restricted access wiring ducts separated from other such ducts by at least~~

~~19 mm (~~ **3 ⁄4**

(1) ~~19 mm (3⁄4 in.)~~

~~can be used to help ensure the required separation of the wiring~~

(1) ~~.~~

Statement of Problem and Substantiation for Public Input

Subdivision 504.30(A)(2) has three informational notes that provide recommendations that can be turned into code requirements. Only one of the informational notes is directly under the requirement it provides information for. The PI changes the information found in the notes to code requirements.

Submitter Information Verification

Submitter Full Name: John Simmons
Organization: Florida East Coast JATC
Street Address:
City:
State:
Zip:
Submittal Date: Sun Aug 23 19:27:23 EDT 2020
Committee: NEC-P14

Committee Statement

Resolution: FR-8538-NFPA 70-2021

Statement: Section 504.30(A)(2) has three informational notes that do not comply with Section 3.1.3. Two of the notes are not located under the requirement they provide information for. All three contain information that is making a recommendation. The first revision converts the informational notes into positive code language and places them in the appropriate locations in the section. This first revision adds clarity to 504.30(A)(2) and makes it more effective.

Public Input No. 4444-NFPA 70-2020 [Section No. 504.30(A)(2)]

(2) Within Enclosures.

Conductors of intrinsically safe circuits shall be secured so that any conductor that might come loose from a terminal is unlikely to come into contact with another terminal. The conductors shall be separated from conductors of nonintrinsically safe circuits by one of the methods in (1) through (4).

(1) Separation by at least 50 mm (2 in.) from conductors of any nonintrinsically safe circuits

(2) Separation from conductors of nonintrinsically safe circuits by use of a grounded metal partition 0.91 mm (0.0359 in.) or thicker

(3) Separation from conductors of nonintrinsically safe circuits by use of an approved insulating partition that extends to within 1.5 mm (0.0625 in.) of the enclosure walls

(4) Where either (1) all of the intrinsically safe circuit conductors or (2) all of the nonintrinsically safe circuit conductors are in grounded metal-sheathed or metal-clad cables where the sheathing or cladding is capable of carrying fault current to ground

Informational Note No. 1: ~~Cables meeting the requirements of Articles 330 and 332~~ Type MC or Type MI cables are typical of those considered acceptable.

Informational Note No. 2: The use of separate wiring compartments for the intrinsically safe and nonintrinsically safe terminals is a typical method of complying with this requirement.

Informational Note No. 3: Physical barriers such as grounded metal partitions or approved insulating partitions or approved restricted access wiring ducts separated from other such ducts by at least 19 mm (¾ in.) can be used to help ensure the required separation of the wiring.

Statement of Problem and Substantiation for Public Input

Section 4.1.4 of the 2020 NEC(r) Style Manual prohibits the reference of an entire article, with the exception of Article 100. Referring to the cable type by name vs. the entire cable article accomplishes this requirement without changing the intent of the Code. It is noted that the word "and" was intentionally changed to "or" as a cable wouldn't meet the requirements of both articles.

Submitter Information Verification

Submitter Full Name: Richard Holub
Organization: The DuPont Company, Inc.
Street Address:
City:
State:
Zip:
Submittal Date: Thu Sep 10 13:09:42 EDT 2020
Committee: NEC-P14

Committee Statement

Resolution: FR-8538-NFPA 70-2021

Statement: Section 504.30(A)(2) has three informational notes that do not comply with Section 3.1.3. Two of the notes are not located under the requirement they provide information for. All three contain information that is making a recommendation. The first revision converts the informational notes into positive code language and places them in the appropriate locations in the section. This first revision adds clarity to 504.30(A)(2) and makes it more effective.

Public Input No. 1372-NFPA 70-2020 [Section No. 504.30(A)(3)]

(3) Other (Not in Raceway or Cable Tray Systems).

Conductors and cables of intrinsically safe circuits run in other than raceway or cable tray systems shall be separated by at least 50 mm (2 in.) and secured from conductors and cables of any nonintrinsically safe circuits.

Exception: Where either (1) all of the intrinsically safe circuit conductors are in Type MI or MC cables or (2) all of the nonintrinsically safe circuit conductors are in raceways or Type MI or MC cables where the sheathing or cladding is capable of carrying fault current ~~to ground~~ .

Statement of Problem and Substantiation for Public Input

Delete 'to ground' since fault current does not go to ground, it goes to the source as explained in the definition of effective ground-fault current path in
Article 100. Removing the text makes the exception always correct.

Submitter Information Verification

Submitter Full Name: Mike Holt
Organization: Mike Holt Enterprises Inc
Street Address:
City:
State:
Zip:
Submittal Date: Mon Jun 01 20:05:22 EDT 2020
Committee: NEC-P14

Committee Statement

Resolution: The term ground as used in this subdivision does not mean that the ground (earth) is being used as the means to provide an effective ground fault path. The text in 250.4(A) states that grounded electrical systems are connected to earth (ground) to limit certain voltages. Subdivision (3) and (4) address bonding of electrical equipment and electrically conductive materials. Every metallic part of the effective ground fault path is required to be bonded together and connected to ground at the service equipment or a separately derived system. The term ground is correctly used in the exception.

Public Input No. 4449-NFPA 70-2020 [Section No. 505.1]

505.1 Scope.

This article covers the requirements for the zone classification system as an alternative to the division classification system covered in Article 500 for electrical and electronic equipment and wiring for all voltages in Zone 0, Zone 1, and Zone 2 hazardous (classified) locations where fire or explosion hazards may exist due to flammable gases, vapors, or liquids.

Informational Note No. 1: The term “Class I” was originally included as a prefix to Zone 0, Zone 1, Zone 2 locations and references as an identifier for flammable gases, vapors, or liquids to differentiate from Class II and Class III locations. Zone 0, Zone 1, and Zone 2 only apply to flammable gases, vapors, or liquids so the “Class I” prefix is redundant and has been deleted. However, the marking of “Class I” is left as an optional marking within this Article.

Informational Note No. 2: ~~For~~ See Part III of Article 501, Article 502, Article 503, or Article 504 for the requirements for electrical and electronic equipment and wiring for all voltages in Class I, Division 1 or Division 2; Class II, Division 1 or Division 2; and Class III, Division 1 or Division 2 hazardous (classified) locations where fire or explosion hazards may exist due to flammable gases or vapors, flammable liquids, or combustible dusts or fibers~~, refer to Articles~~ 500 ~~through~~ 504 .

Informational Note No. 3: Text that is followed by a reference in brackets has been extracted from NFPA 497-2017, *Recommended Practice for the Classification of Flammable Liquids, Gases, or Vapors and of Hazardous (Classified) Locations for Electrical Installations in Chemical Process Areas*. Only editorial changes were made to the extracted text to make it consistent with this *Code*.

Statement of Problem and Substantiation for Public Input

Section 4.1.4 of the 2020 NEC(r) Style Manual prohibits the reference of an entire article, with the exception of Article 100. It isn't clear how to correct the reference to Article 500 but the informational note seems easily corrected by pointing to the Part III sections of each article as Part III contains the equipment installation requirements for the Division classified locations. In addition, the informational note was reordered to put the reference at the beginning of the informational note to comply with Section 4.1.3 of the Style Manual.

Related Public Inputs for This Document

Related Input	Relationship
Public Input No. 4375-NFPA 70-2020 [Section No. 500.1]	

Submitter Information Verification

Submitter Full Name: Richard Holub
Organization: The DuPont Company, Inc.
Street Address:
City:
State:
Zip:
Submittal Date: Thu Sep 10 13:16:18 EDT 2020

Committee: NEC-P14

Committee Statement

Resolution: FR-8724-NFPA 70-2021

Statement: Section 4.1.4 of the 2020 NEC Style Manual prohibits the reference of an entire article, with the exception of Article 100. Pointing individuals to the scope of Article 500 in 505.1 and deleting informational note #2 to correlate with the action taken in the scope. In addition, the informational note was reordered to put the reference at the beginning of the informational note to comply with Section 4.1.3 of the Style Manual.

Public Input No. 4455-NFPA 70-2020 [Section No. 505.3]

505.3 Other Articles.

All other applicable rules contained in this *Code* shall apply to electrical equipment and wiring installed in hazardous (classified) locations except as modified by this article .

Exception:~~ As modified by Article~~ 504 ~~and this article~~ Intrinsically Safe Systems installed in accordance with the intrinsically safe systems article are exempt from the other code requirements as stated in that article .

Where the term "Class I" is used with respect to Zone classifications within other articles of the *Code*, it shall apply to Zone 0, Zone 1, and Zone 2 designations.

Informational Note: The term "Class I" was originally included as a prefix to Zone 0, Zone 1, and Zone 2 locations and references as an identifier for flammable gases, vapors, or liquids to differentiate from Class II and Class III locations. Zone 0, Zone 1, and Zone 2 only apply to flammable gases, vapors, or liquids so the "Class I" prefix is redundant and has been deleted, except for text that is extracted from other documents or to remain consistent throughout an article.

Statement of Problem and Substantiation for Public Input

Section 4.1.4 of the 2020 NEC(r) Style Manual prohibits references to an entire article, with the exception of Article 100. Section 90.3 makes the code arrangement clear and this section doesn't change that so it appears to be unnecessary in the usability or enforcement of the Code. This attempted rewrite will accomplish the requirement to not specifically refer to an entire article but the CMP may wish to eliminate this section to correlate with the proposed action in PI 4385.

Related Public Inputs for This Document

Related Input	Relationship
Public Input No. 4385-NFPA 70-2020 [Section No. 500.3]	
Public Input No. 4482-NFPA 70-2020 [Section No. 506.3]	

Submitter Information Verification

Submitter Full Name: Richard Holub
Organization: The DuPont Company, Inc.
Street Address:
City:
State:
Zip:
Submittal Date: Thu Sep 10 13:24:30 EDT 2020
Committee: NEC-P14

Committee Statement

Resolution: FR-8741-NFPA 70-2021

Statement: This section is redundant to 90.3 and does not comply with the NEC® Style Manual section 4.1.4. As such, it is being deleted. This does not change the code or the fact that intrinsically safe systems are permitted in Zone 0, 1, and 2 locations as permitted in Section 505.15.

Public Input No. 1129-NFPA 70-2020 [Section No. 505.4]

505.4 Documentation.

All areas in industrial occupancies designated as hazardous (classified) locations shall be properly documented. This documentation shall be available to those authorized to design, install, inspect, maintain, or operate electrical equipment at the location.

Informational Note No. 1: For examples of area classification drawings, see ANSI/API RP 505-2018, *Recommended Practice for Classification of Locations for Electrical Installations at Petroleum Facilities Classified as Class I, Zone 0, Zone 1, and Zone 2*; ANSI/ISA-60079-10-1 (12.24.01)-2014 *Explosive Atmospheres — Part 10-1: Classification of Areas — Explosive gas atmospheres*; and *Model Code of Safe Practice, Part 15: Area Classification Code for Installations Handling Flammable Fluids, EI 15*:2015, Energy Institute, London.

Informational Note No. 2: Where gas detection equipment is used as a means of protection in accordance with 505.8(I)(2), (I)(3), or (I)(4), the documentation typically includes the type of detection equipment, its listing, installation location(s), alarm and shutdown criteria, and calibration frequency.

Informational Note No. 3: For further information on the classification of locations, see NFPA 497-2017, *Recommended Practice for the Classification of Flammable Liquids, Gases, or Vapors and of Hazardous (Classified) Locations for Electrical Installations in Chemical Process Areas*; ANSI/API RP 505-2018, *Recommended Practice for Classification of Locations for Electrical Installations at Petroleum Facilities Classified as Class I, Zone 0, Zone 1, and Zone 2*; ANSI/ISA-60079-10-1 (12.24.01)-2014, *Explosive Atmospheres — Part 10-1: Classification of Areas — Explosive gas atmospheres*; and *Model Code of Safe Practice, Part 15: Area Classification Code for Installations Handling Flammable Fluids, EI 15*:2015, Energy Institute, London.

Informational Note No. 4: For further information on protection against static electricity and lightning hazards in hazardous (classified) locations, see NFPA 77-2019, *Recommended Practice on Static Electricity*; NFPA 780-2017, *Standard for the Installation of Lightning Protection Systems*; and API RP 2003-2015, *Protection Against Ignitions Arising Out of Static Lightning and Stray Currents*.

Informational Note No. 5: For further information on ventilation, see NFPA 30-2018, *Flammable and Combustible Liquids Code*, and ANSI/API RP 505-2018, *Recommended Practice for Classification of Locations for Electrical Installations at Petroleum Facilities Classified as Class I, Zone 0, Zone 1, and Zone 2*.

Informational Note No. 6: For further information on electrical systems for hazardous (classified) locations on offshore oil and gas producing platforms, drilling rigs, and workover rigs, see ANSI/API RP 14FZ-2013, *Recommended Practice for Design and Installation of Electrical Systems for Fixed and Floating Offshore Petroleum Facilities for Unclassified and Class I, Zone 0, Zone 1, and Zone 2 Locations*.

Informational Note No. 7: For further information on application of electrical equipment in hazardous (classified) locations in general, see ANSI/ISA-60079-0 (12.00.01)-2013, *Explosive Atmospheres — Part 0: Equipment — General Requirements*; ANSI/ISA-12.01.01-2013, *Definitions and Information Pertaining to Electrical Apparatus in Hazardous (Classified) Locations*; and ANSI/UL 60079-0:2013, *Electrical Apparatus for Explosive Gas Atmospheres — Part 0: General Requirements*.

Informational Note No. 8: Portable or transportable equipment having self-contained power supplies, such as battery-operated equipment, could potentially become an ignition source in hazardous (classified) locations. See ANSI/UL 121203-2011, *Standard for Portable Electronic Products Suitable for Use in Class I and II, Division 2, Class I Zone 2 and Class III, Division 1 and 2 Hazardous (Classified) Locations*.

Informational Note No. 9: For additional information concerning the installation of equipment utilizing optical emissions technology (such as laser equipment) that could potentially become an ignition source in hazardous (classified) locations, see ANSI/UL-60079-28-2017, *Explosive Atmospheres — Part 28: Protection of equipment and transmission systems using optical radiation*.

Informational Note No. 10: For information on electrical resistance trace heating for hazardous (classified) locations, see ~~ANSI~~ IEC /IEEE 60079-30-2:2015, IEEE/IEC

International *Standard for Explosive Atmospheres — Part 30-2: Electrical resistance trace heating — Application guide for design, installation and maintenance*.

Informational Note No. 11: For information on electric skin effect trace heating for hazardous (classified) locations, IEEE 844.~~1~~ 2 -2017/CSA C22.2 No. 293.~~1~~ 2 -17, IEEE/CSA *Standard for Skin Effect Trace Heating of Pipelines, Vessels, Equipment, and Structures — General, Testing, Marking, and Documentation Requirements*, and IEEE 844.2-2017/CSA C293.2:17, *IEEE/CSA Standard for Skin Effect Trace Heating of Pipelines, Vessels, Equipment, and Structures — Application Guide for Design, Installation, Testing, Commissioning, and Maintenance*.

Informational Note No.12 : For information on electric impedance heating for hazardous (classified) locations, see *IEEE 844.4/CSA C22.2 No.293.4:19, Standard for Impedance Heating of Pipelines and Equipment. General, Testing, Marking, and Documentation Requirements* and *IEEE 844.4/CSA C293.4:2019,Standard for Impedance Heating of Pipelines and Equipment - Application Guide for Design, Installation, Testing, Commissioning, and Maintenance*

Statement of Problem and Substantiation for Public Input

This proposal updates information from industry standards. It makes available the most up-to-date product and marking requirements and provides criteria to determine the suitability when utilized in industrial and commercial applications. The information should help provide electrical, mechanical durability such that in normal use its performance is reliable and poses no danger to the user or surroundings

Submitter Information Verification

Submitter Full Name: Ben Johnson
Organization: [Not Specified]
Affiliation: Thermon
Street Address:
City:
State:
Zip:
Submittal Date: Mon May 18 14:07:01 EDT 2020
Committee: NEC-P14

Committee Statement

Resolution: FR-8689-NFPA 70-2021

Statement: The standards references were updated to reflect the current editions/dates. The words ‘in industrial occupancies’ were deleted and other changes were made to correlate with the action on Public Input 3509. The recommendation to include UL 60079-10-1 is not accepted because the standard is not yet published.

Public Input No. 2255-NFPA 70-2020 [Section No. 505.4]

505.4 Documentation.

All areas in industrial occupancies designated as hazardous (classified) locations shall be properly documented. This documentation shall be available to those authorized to design, install, inspect, maintain, or operate electrical equipment at the location.

Informational Note No. 1: For examples of area classification drawings, see ANSI/API RP 505-2018, *Recommended Practice for Classification of Locations for Electrical Installations at Petroleum Facilities Classified as Class I, Zone 0, Zone 1, and Zone 2*; ANSI/ISA-60079-10-1 (12.24.01)-2014 *Explosive Atmospheres — Part 10-1: Classification of Areas — Explosive gas atmospheres*; and *Model Code of Safe Practice, Part 15: Area Classification Code for Installations Handling Flammable Fluids, EI 15*:2015, Energy Institute, London.

Informational Note No. 2: Where gas detection equipment is used as a means of protection in accordance with 505.8(I)(2), (I)(3), or (I)(4), the documentation typically includes the type of detection equipment, its listing, installation location(s), alarm and shutdown criteria, and calibration frequency.

Informational Note No. 3: For further information on the classification of locations, see NFPA 497-2017, *Recommended Practice for the Classification of Flammable Liquids, Gases, or Vapors and of Hazardous (Classified) Locations for Electrical Installations in Chemical Process Areas*; ANSI/API RP 505-2018, *Recommended Practice for Classification of Locations for Electrical Installations at Petroleum Facilities Classified as Class I, Zone 0, Zone 1, and Zone 2*; ANSI/ISA-60079-10-1 (12.24.01)-2014, *Explosive Atmospheres — Part 10-1: Classification of Areas — Explosive gas atmospheres*; and *Model Code of Safe Practice, Part 15: Area Classification Code for Installations Handling Flammable Fluids, EI 15*:2015, Energy Institute, London.

Informational Note No. 4: For further information on protection against static electricity and lightning hazards in hazardous (classified) locations, see NFPA 77-2019, *Recommended Practice on Static Electricity*; NFPA 780-2017, *Standard for the Installation of Lightning Protection Systems*; and API RP 2003-2015, *Protection Against Ignitions Arising Out of Static Lightning and Stray Currents*.

Informational Note No. 5: For further information on ventilation, see NFPA 30-2018, *Flammable and Combustible Liquids Code*, and ANSI/API RP 505-2018, *Recommended Practice for Classification of Locations for Electrical Installations at Petroleum Facilities Classified as Class I, Zone 0, Zone 1, and Zone 2*.

Informational Note No. 6: For further information on electrical systems for hazardous (classified) locations on offshore oil and gas producing platforms, drilling rigs, and workover rigs, see ANSI/API RP 14FZ-2013, *Recommended Practice for Design and Installation of Electrical Systems for Fixed and Floating Offshore Petroleum Facilities for Unclassified and Class I, Zone 0, Zone 1, and Zone 2 Locations*.

Informational Note No. 7: For further information on application of electrical equipment in hazardous (classified) locations in general, see ANSI/ISA-60079-0 (12.00.01)-2013, *Explosive Atmospheres — Part 0: Equipment — General Requirements*; ANSI/ISA-12.01.01-2013, *Definitions and Information Pertaining to Electrical Apparatus in Hazardous (Classified) Locations*; and ANSI/UL 60079-0:2013, *Electrical Apparatus for Explosive Gas Atmospheres — Part 0: General Requirements*.

Informational Note No. 8: Portable or transportable equipment having self-contained power supplies, such as battery-operated equipment, could potentially become an ignition source in hazardous (classified) locations. See ANSI/UL 121203-2011, *Standard for Portable Electronic Products Suitable for Use in Class I and II, Division 2, Class I Zone 2 and Class III, Division 1 and 2 Hazardous (Classified) Locations*.

Informational Note No. 9: For additional information concerning the installation of equipment utilizing optical emissions technology (such as laser equipment) that could potentially become an ignition source in hazardous (classified) locations, see ANSI/UL-60079-28-2017, *Explosive Atmospheres — Part 28: Protection of equipment and transmission systems using optical radiation*.

Informational Note No. 10: For information on electrical resistance trace heating for hazardous (classified) locations, see ~~ANSI/~~ IEEE 60079-30-2:2015, IEEE/IEC

International *Standard for Explosive Atmospheres — Part 30-2: Electrical resistance trace heating — Application guide for design, installation and maintenance*.

Informational Note No. 11: For information on electric skin effect trace heating for hazardous (classified) locations, ~~IEEE~~ see IEEE 844.~~1~~ 2 -2017/CSA ~~C22~~ C293 .2 ~~No. 293.1~~ : 17, *IEEE/CSA Standard for Skin Effect Trace Heating of Pipelines, Vessels, Equipment, and Structures — ~~General,~~ Application Guide for Design, Installation, Testing, ~~Marking~~ Commissioning , and ~~Documentation Requirements~~ ~~, and~~ Maintenance* .

Informational Note No.12 :For information on electric impedance heating, see *IEEE 844.*

~~2~~
4 -

~~2017~~
2019 /CSA C293.

~~2~~
4 :

~~17~~
19 ,

~~IEEE/CSA~~
Standard for

~~Skin Effect Trace~~
Impedance Heating of Pipelines

~~, Vessels, Equipment, and Structures —~~
and Equipment - Application Guide for Design, Installation, Testing, Commissioning, and Maintenance .

Statement of Problem and Substantiation for Public Input

This proposal updates information from industry standards. It makes available the most up-to-date product and marking requirements and provides criteria to determine the suitability when utilized in industrial and commercial applications. The information should help provide electrical, mechanical durability such that in normal use its performance is reliable and poses no danger to the user or surroundings

Submitter Information Verification

Submitter Full Name: Ben Johnson
Organization: [Not Specified]
Affiliation: Thermon
Street Address:
City:
State:
Zip:
Submittal Date: Wed Aug 12 13:44:32 EDT 2020
Committee: NEC-P14

Committee Statement

Resolution: FR-8689-NFPA 70-2021

Statement: The standards references were updated to reflect the current editions/dates. The words 'in industrial occupancies' were deleted and other changes were made to correlate with the action on Public Input 3509. The recommendation to include UL 60079-10-1 is not accepted because the standard is not yet published.

Public Input No. 2513-NFPA 70-2020 [Section No. 505.4]

505.4 Documentation.

All areas ~~in industrial occupancies~~ designated as hazardous (classified) locations shall be properly documented. This documentation shall be available to those authorized to design, install, inspect, maintain, or operate electrical equipment at the location.

Informational Note No. 1: For examples of area classification drawings, see ANSI/API RP 505-2018, *Recommended Practice for Classification of Locations for Electrical Installations at Petroleum Facilities Classified as Class I, Zone 0, Zone 1, and Zone 2*; ANSI/ISA-60079-10-1 (12.24.01)-2014 *Explosive Atmospheres — Part 10-1: Classification of Areas — Explosive gas atmospheres*; and *Model Code of Safe Practice, Part 15: Area Classification Code for Installations Handling Flammable Fluids, EI 15*:2015, Energy Institute, London.

Informational Note No. 2: Where gas detection equipment is used as a means of protection in accordance with 505.8(I)(2), (I)(3), or (I)(4), the documentation typically includes the type of detection equipment, its listing, installation location(s), alarm and shutdown criteria, and calibration frequency.

Informational Note No. 3: For further information on the classification of locations, see NFPA 497-2017, *Recommended Practice for the Classification of Flammable Liquids, Gases, or Vapors and of Hazardous (Classified) Locations for Electrical Installations in Chemical Process Areas*; ANSI/API RP 505-2018, *Recommended Practice for Classification of Locations for Electrical Installations at Petroleum Facilities Classified as Class I, Zone 0, Zone 1, and Zone 2*; ANSI/ISA-60079-10-1 (12.24.01)-2014, *Explosive Atmospheres — Part 10-1: Classification of Areas — Explosive gas atmospheres*; and *Model Code of Safe Practice, Part 15: Area Classification Code for Installations Handling Flammable Fluids, EI 15*:2015, Energy Institute, London.

Informational Note No. 4: For further information on protection against static electricity and lightning hazards in hazardous (classified) locations, see NFPA 77-2019, *Recommended Practice on Static Electricity*; NFPA 780-2017, *Standard for the Installation of Lightning Protection Systems*; and API RP 2003-2015, *Protection Against Ignitions Arising Out of Static Lightning and Stray Currents*.

Informational Note No. 5: For further information on ventilation, see NFPA 30-2018, *Flammable and Combustible Liquids Code*, and ANSI/API RP 505-2018, *Recommended Practice for Classification of Locations for Electrical Installations at Petroleum Facilities Classified as Class I, Zone 0, Zone 1, and Zone 2*.

Informational Note No. 6: For further information on electrical systems for hazardous (classified) locations on offshore oil and gas producing platforms, drilling rigs, and workover rigs, see ANSI/API RP 14FZ-2013, *Recommended Practice for Design and Installation of Electrical Systems for Fixed and Floating Offshore Petroleum Facilities for Unclassified and Class I, Zone 0, Zone 1, and Zone 2 Locations*.

Informational Note No. 7: For further information on application of electrical equipment in hazardous (classified) locations in general, see ANSI/ISA-60079-0 (12.00.01)-2013, *Explosive Atmospheres — Part 0: Equipment — General Requirements*; ANSI/ISA-12.01.01-2013, *Definitions and Information Pertaining to Electrical Apparatus in Hazardous (Classified) Locations*; and ANSI/UL 60079-0:2013, *Electrical Apparatus for Explosive Gas Atmospheres — Part 0: General Requirements*.

Informational Note No. 8: Portable or transportable equipment having self-contained power supplies, such as battery-operated equipment, could potentially become an ignition source in hazardous (classified) locations. See ANSI/UL 121203-2011, *Standard for Portable Electronic Products Suitable for Use in Class I and II, Division 2, Class I Zone 2 and Class III, Division 1 and 2 Hazardous (Classified) Locations*.

Informational Note No. 9: For additional information concerning the installation of equipment utilizing optical emissions technology (such as laser equipment) that could potentially become an ignition source in hazardous (classified) locations, see ANSI/UL-60079-28-2017, *Explosive Atmospheres — Part 28: Protection of equipment and transmission systems using optical radiation*.

Informational Note No. 10: For information on electrical resistance trace heating for hazardous (classified) locations, see ANSI/IEEE 60079-30-2:2015, IEEE/IEC

International *Standard for Explosive Atmospheres — Part 30-2: Electrical resistance trace heating — Application guide for design, installation and maintenance*.

Informational Note No. 11: For information on electric skin effect trace heating for hazardous (classified) locations, IEEE 844.1-2017/CSA C22.2 No. 293.1-17, IEEE/CSA *Standard for Skin Effect Trace Heating of Pipelines, Vessels, Equipment, and Structures — General, Testing, Marking, and Documentation Requirements*, and IEEE 844.2-2017/CSA C293.2:17, *IEEE/CSA Standard for Skin Effect Trace Heating of Pipelines, Vessels, Equipment, and Structures — Application Guide for Design, Installation, Testing, Commissioning, and Maintenance*.

Statement of Problem and Substantiation for Public Input

The requirement for documentation is found in 500.4 but the requirement is important enough to be included in each Article; 501, 502, 503, 505, and 506. The requirement should be consistent in all five locations.

Related Public Inputs for This Document

Related Input	Relationship
Public Input No. 2510-NFPA 70-2020 [New Section after 501.1]	
Public Input No. 2511-NFPA 70-2020 [New Section after 502.1]	
Public Input No. 2518-NFPA 70-2020 [New Section after 503.1]	
Public Input No. 2510-NFPA 70-2020 [New Section after 501.1]	
Public Input No. 2511-NFPA 70-2020 [New Section after 502.1]	
Public Input No. 2518-NFPA 70-2020 [New Section after 503.1]	

Submitter Information Verification

Submitter Full Name: John Simmons
Organization: Florida East Coast JATC
Street Address:
City:
State:
Zip:
Submittal Date: Sun Aug 23 17:33:20 EDT 2020
Committee: NEC-P14

Committee Statement

Resolution: FR-8689-NFPA 70-2021

Statement: The standards references were updated to reflect the current editions/dates. The words ‘in industrial occupancies’ were deleted and other changes were made to correlate with the action on Public Input 3509. The recommendation to include UL 60079-10-1 is not accepted because the standard is not yet published.

Public Input No. 713-NFPA 70-2020 [Section No. 505.4]

505.4 Documentation.

All areas in industrial occupancies designated as hazardous (classified) locations shall be properly documented. This documentation shall be available to those authorized to design, install, inspect, maintain, or operate electrical equipment at the location.

Informational Note No. 1: For examples of area classification drawings, see ANSI/API RP 505-2018, *Recommended Practice for Classification of Locations for Electrical Installations at Petroleum Facilities Classified as Class I, Zone 0, Zone 1, and Zone 2*; ANSI/~~ISA-~~ UL 60079-10-1 ~~(12.24.01)-2014~~ *Explosive Atmospheres — Part 10-1: Classification of Areas — Explosive gas atmospheres*; and *Model Code of Safe Practice, Part 15: Area Classification Code for Installations Handling Flammable Fluids, EI 15*:2015, Energy Institute, London.

Informational Note No. 2: Where gas detection equipment is used as a means of protection in accordance with 505.8(I)(2), (I)(3), or (I)(4), the documentation typically includes the type of detection equipment, its listing, installation location(s), alarm and shutdown criteria, and calibration frequency.

Informational Note No. 3: For further information on the classification of locations, see NFPA 497-2017, *Recommended Practice for the Classification of Flammable Liquids, Gases, or Vapors and of Hazardous (Classified) Locations for Electrical Installations in Chemical Process Areas*; ANSI/API RP 505-2018, *Recommended Practice for Classification of Locations for Electrical Installations at Petroleum Facilities Classified as Class I, Zone 0, Zone 1, and Zone 2*; ANSI/~~ISA-~~ UL 60079-10-1 ~~(12.24.01)-2014~~ , *Explosive Atmospheres — Part 10-1: Classification of Areas — Explosive gas atmospheres*; and *Model Code of Safe Practice, Part 15: Area Classification Code for Installations Handling Flammable Fluids, EI 15*:2015, Energy Institute, London.

Informational Note No. 4: For further information on protection against static electricity and lightning hazards in hazardous (classified) locations, see NFPA 77-2019, *Recommended Practice on Static Electricity*; NFPA 780-2017, *Standard for the Installation of Lightning Protection Systems*; and API RP 2003-2015, *Protection Against Ignitions Arising Out of Static Lightning and Stray Currents*.

Informational Note No. 5: For further information on ventilation, see NFPA 30-2018, *Flammable and Combustible Liquids Code*, and ANSI/API RP 505-2018, *Recommended Practice for Classification of Locations for Electrical Installations at Petroleum Facilities Classified as Class I, Zone 0, Zone 1, and Zone 2*.

Informational Note No. 6: For further information on electrical systems for hazardous (classified) locations on offshore oil and gas producing platforms, drilling rigs, and workover rigs, see ANSI/API RP 14FZ-2013, *Recommended Practice for Design and Installation of Electrical Systems for Fixed and Floating Offshore Petroleum Facilities for Unclassified and Class I, Zone 0, Zone 1, and Zone 2 Locations*.

Informational Note No. 7: For further information on application of electrical equipment in hazardous (classified) locations in general, see ANSI/~~ISA-60079-0 (12.00.01)-2013, *Explosive Atmospheres — Part 0: Equipment — General Requirements* ; ANSI/ISA-12.01.01-2013,~~ UL 120101-2019, *Definitions and Information Pertaining to Electrical Apparatus in Hazardous (Classified) Locations*; and ANSI/UL 60079-0~~:2013~~ -2019 , *Electrical Apparatus for Explosive Gas Atmospheres — Part 0: General Requirements*.

Informational Note No. 8: Portable or transportable equipment having self-contained power supplies, such as battery-operated equipment, could potentially become an ignition source in hazardous (classified) locations. See ANSI/UL 121203-2011, *Standard for Portable Electronic Products Suitable for Use in Class I and II, Division 2, Class I Zone 2 and Class III, Division 1 and 2 Hazardous (Classified) Locations*.

Informational Note No. 9: For additional information concerning the installation of equipment utilizing optical emissions technology (such as laser equipment) that could potentially become an ignition source in hazardous (classified) locations, see ANSI/UL - 60079-28-2017, *Explosive Atmospheres — Part 28: Protection of equipment and transmission systems using optical radiation*.

Informational Note No. 10: For information on electrical resistance trace heating for hazardous (classified) locations, see ANSI/IEEE 60079-30-2~~:~~ - 2015, IEEE/IEC

International *Standard for Explosive Atmospheres — Part 30-2: Electrical resistance trace heating — Application guide for design, installation and maintenance*.

Informational Note No. 11: For information on electric skin effect trace heating for hazardous (classified) locations, IEEE 844.1-2017/CSA C22.2 No. 293.1-17, IEEE/CSA *Standard for Skin Effect Trace Heating of Pipelines, Vessels, Equipment, and Structures — General, Testing, Marking, and Documentation Requirements*, and IEEE 844.2-2017/CSA C293.2:17, *IEEE/CSA Standard for Skin Effect Trace Heating of Pipelines, Vessels, Equipment, and Structures — Application Guide for Design, Installation, Testing, Commissioning, and Maintenance*.

Statement of Problem and Substantiation for Public Input

ANSI/ISA-60079-10-1 (12.24.01)-2014, ANSI/ISA-60079-0(12.00.01)-2013 and ANSI/ISA-12.01.01-2013 have been replace by ANSI/UL 60079-10-1, ANSI/UL 60079-0-2019 and ANSI/UL 120101-2019.

Note: The U.S. is in the process of adopting IEC 60079-10-1 as ANSI/UL 60079-10-1 with National differences. This adoption is expected to be in place prior to the Second Draft Public Comment Closing Date.

See also PI Nos.714.

Related Public Inputs for This Document

Related Input	Relationship
Public Input No. 714-NFPA 70-2020 [Section No. 505.5(B)(1)]	
Public Input No. 714-NFPA 70-2020 [Section No. 505.5(B)(1)]	

Submitter Information Verification

Submitter Full Name: Paul Kelly
Organization: UL LLC
Street Address:
City:
State:
Zip:
Submittal Date: Fri Mar 20 12:29:03 EDT 2020
Committee: NEC-P14

Committee Statement

Resolution: FR-8689-NFPA 70-2021

Statement: The standards references were updated to reflect the current editions/dates. The words 'in industrial occupancies' were deleted and other changes were made to correlate with the action on Public Input 3509. The recommendation to include UL 60079-10-1 is not accepted because the standard is not yet published.

Public Input No. 714-NFPA 70-2020 [Section No. 505.5(B)(1)]

(1) Zone 0.

A Zone 0 location is a location in which one of the following conditions exists:

(1) Ignitible concentrations of flammable gases or vapors are present continuously

(2) Ignitible concentrations of flammable gases or vapors are present for long periods of time

Informational Note No. 1: As a guide in determining when flammable gases or vapors are present continuously or for long periods of time, refer to ANSI/API RP 505-2018, *Recommended Practice for Classification of Locations for Electrical Installations of Petroleum Facilities Classified as Class I, Zone 0, Zone 1, and Zone 2*, and ANSI/~~ISA 60079~~ UL 60079 -10-1-~~2014~~ , *Explosive Atmospheres — Part 10-1: Classification of Areas — explosive gas atmospheres*.

Informational Note No. 2: This classification includes locations inside vented tanks or vessels that contain volatile flammable liquids; inside inadequately vented spraying or coating enclosures where volatile flammable solvents are used; between the inner and outer roof sections of a floating roof tank containing volatile flammable liquids; inside open vessels, tanks, and pits containing volatile flammable liquids; the interior of an exhaust duct that is used to vent ignitible concentrations of gases or vapors; and inside inadequately ventilated enclosures that contain normally venting instruments utilizing or analyzing flammable fluids and venting to the inside of the enclosures.

Statement of Problem and Substantiation for Public Input

ANSI/ISA 60079-10-1-2014 has been replaced by ANSI/UL 60079-10-1

Note: The U.S. is in the process of adopting IEC 60079-10-1 as ANSI/UL 60079-10-1 with National differences. This adoption is expected to be in place prior to the Second Draft Public Comment Closing Date.

See also PI Nos.713.

Related Public Inputs for This Document

Related Input	Relationship
Public Input No. 713-NFPA 70-2020 [Section No. 505.4]	
Public Input No. 713-NFPA 70-2020 [Section No. 505.4]	

Submitter Information Verification

Submitter Full Name: Paul Kelly
Organization: UL LLC
Street Address:
City:
State:
Zip:
Submittal Date: Fri Mar 20 13:56:49 EDT 2020
Committee: NEC-P14

Committee Statement

Resolution: The recommendation to include UL 60079-10-1 is not accepted because the standard is not yet published.

Public Input No. 4462-NFPA 70-2020 [Section No. 505.7 [Excluding any Sub-Sections]]

~~Article~~ ~~505~~ - This article requires equipment construction and installation that ensures safe performance under conditions of proper use and maintenance.

Informational Note No. 1: It is important that inspection authorities and users exercise more than ordinary care with regard to the installation and maintenance of electrical equipment in hazardous (classified) locations.

Informational Note No. 2: Low ambient conditions require special consideration. Electrical equipment depending on the protection techniques described by 505.8(A) may not be suitable for use at temperatures lower than -20°C (-4°F) unless they are identified for use at lower temperatures. However, at low ambient temperatures, flammable concentrations of vapors may not exist in a location classified Zones 0, 1, or 2 at normal ambient temperature.

Statement of Problem and Substantiation for Public Input

Section 4.1.4 of the 2020 NEC(r) Style Manual prohibits references to an entire article, with the exception of Article 100. Changing to "this article" accomplishes the objective without changing the intent of the Code.

Submitter Information Verification

Submitter Full Name: Richard Holub
Organization: The DuPont Company, Inc.
Street Address:
City:
State:
Zip:
Submittal Date: Thu Sep 10 13:31:06 EDT 2020
Committee: NEC-P14

Committee Statement

Resolution: FR-8740-NFPA 70-2021

Statement: Section 4.1.4 of the 2020 NEC Style Manual prohibits references to an entire article, with the exception of Article 100. Changing to "this article" accomplishes the objective without changing the intent of the Code.

Public Input No. 3665-NFPA 70-2020 [Section No. 505.8]

505.8 Protection Techniques.**(PLEASE SEE ATTACHED WORD DOC FOR ALL CHANGES TO 505.8 INCLUDING PROPOSED NEW TABLE)**

Acceptable protection techniques for electrical and electronic equipment in hazardous (classified) locations shall be as described in 505.8(A) through (N).

Informational Note No. 1: For additional information, see ANSI/ISA-60079-0-2013, *Explosive Atmospheres — Part 0: Equipment — General Requirements*; ANSI/ISA-12.01.01-2013, *Definitions and Information Pertaining to Electrical Equipment in Hazardous (Classified) Locations*; and ANSI/UL 60079–0-2013, *Explosive Atmospheres — Part 0: Equipment General Requirements*.

Informational Note No. 2: See Table 505.9(C)(2)(4) for descriptions of subdivisions of protection techniques.

(A) Flameproof Enclosure “d”.

This protection technique shall be permitted for equipment in Zone 1 or Zone 2 locations.

(B) Pressurized Enclosure “p”.

This protection technique shall be permitted for equipment in those Zone 1 or Zone 2 locations for which it is identified.

(C) Intrinsic Safety “i”.

This protection technique shall be permitted for apparatus and associated apparatus for Zone 0, Zone 1, or Zone 2 locations for which it is listed.

(D) Type of Protection “n”.

This protection technique shall be permitted for equipment in Zone 2 locations. Type of protection “n” is further subdivided into nA, nC, and nR.

(E) Liquid Immersion “o”.

This protection technique shall be permitted for equipment in Zone 1 or Zone 2 locations.

(F) Increased Safety “e”.

This protection technique shall be permitted for equipment in Zone 1 or Zone 2 locations.

(G) Encapsulation “m”.

This protection technique shall be permitted for equipment in Zone 0, Zone 1, or Zone 2 locations for which it is identified.

(H) Powder Filling “q”.

This protection technique shall be permitted for equipment in Zone 1 or Zone 2 locations.

(I) Combustible Gas Detection System.

A combustible gas detection system shall be permitted as a means of protection in industrial establishments with restricted public access and where the conditions of maintenance and supervision ensure that only qualified persons service the installation.

(1) General.

Any gas detection system utilized as a protection technique shall meet all of the requirements in 505.8(I)(1)(a) through (I)(1)(e).

(a) The gas detection equipment used shall be listed for Zone 1 and listed for the detection of the specific gas or vapor to be encountered.

(b) The gas detection system shall not utilize portable or transportable equipment, or temporary wiring methods.

(c) The gas detection system shall only use point-type sensors. The system shall be permitted to be augmented with open-path (line-of-sight)–type sensors, but open-path type sensors shall not be the basis for this protection technique.

(d) The type of detection equipment, its listing, installation location(s), alarm and shutdown criteria, and calibration frequency shall be documented where combustible gas detectors are used as a protection technique.

(e) The applications for the use of combustible gas detection systems as a protection technique shall be limited to 505.8(I)(2), (I)(3), or (I)(4).

Informational Note No. 1: For further information, see ANSI/ISA-TR12.13.03-2009, *Guide for Combustible Gas Detection as a Method of Protection*.

Informational Note No. 2: For further information, see ANSI/ISA-60079-29-1 (12.13.01)-2013, *Explosive Atmospheres — Part 29-1: Gas detectors — Performance requirements of detectors for flammable gases.*

Informational Note No. 3: For further information, see ANSI/API RP 505-2018, *Recommended Practice for Classification of Locations for Electrical Installations at Petroleum Facilities Classified as Class I, Zone 0, Zone 1, and Zone 2*.

Informational Note No. 4: For further information, see ANSI/ISA-60079-29-2-2012, *Explosive Atmospheres — Part 29-2: Gas detectors — Selection, installation, use and maintenance of detectors for flammable gases and oxygen*.

(2) Inadequate Ventilation.

A location, enclosed space, or building that is classified as a Zone 1 location due to inadequate ventilation, that is provided with a combustible gas detection system will be allowed to utilize electrical equipment, installation methods, and wiring practices suitable for Zone 2 installations. Sensing a gas concentration of not more than 40 percent of the lower flammable limit or a gas detector system malfunction shall activate an alarm (audible or visual, or both, as most appropriate for the area).

(3) Interior of a Building or Enclosed Space.

Any building or enclosed space that does not contain a source of flammable gas or vapors that is located in, or with an opening into, a Zone 2 hazardous (classified) location that is provided with a combustible gas detection system will be permitted to utilize electrical equipment, installation methods, and wiring practices suitable for unclassified installations under all of the following conditions:

(1) An alarm (audible or visual, or both) shall be sounded at not more than 20 percent of the lower flammable limit.

(2) Sensing a gas concentration of not more than 40 percent of the lower flammable limit or a gas detector system malfunction shall both activate an alarm (audible or visual, or both, as most appropriate for the area) and initiate automatic disconnection of power from all electrical devices in the area that are not suitable for Zone 2.

(3) The power disconnecting device(s) shall be suitable for Zone 1 if located inside the building or enclosed space. If the disconnecting device(s) is located outside the building or enclosed space, it shall be suitable for the location in which it is installed.

Redundant or duplicate equipment (such as sensors) shall be permitted to be installed to avoid disconnecting electrical power when equipment malfunctions are indicated.

When automatic shutdown could introduce additional or increased hazard, this technique shall not be permitted.

(4) Interior of a Control Panel.

Inside the interior of a control panel containing instrumentation or other equipment utilizing or measuring flammable liquids, gases, or vapors, that is provided with combustible gas detection equipment will be allowed to utilize electrical equipment, installation methods, and wiring practices suitable for Zone 2 installations.

An alarm (audible or visual, or both) shall be sounded at not more than 40 percent of the lower flammable limit.

(J) Protection by Electrical Resistance Trace Heating “60079-30-1”.

This protection technique shall be permitted for electrical resistance trace heating equipment in Zone 1 or Zone 2 for which it is listed.

(K) Inherently Safe Optical Radiation “op is”.

This protection technique shall be permitted for equipment in Zone 0, Zone 1, or Zone 2 locations for which the equipment is identified.

(L) Protected Optical Radiation “op pr”.

This protection technique shall be permitted for equipment in Zone 1 or Zone 2 locations for which the equipment is identified.

(M) Optical System With Interlock “op sh”.

This protection technique shall be permitted for equipment in Zone 0, Zone 1, or Zone 2 locations for which the equipment is identified.

(N) Protection by Skin Effect Trace Heating “IEEE 844.1”.

This protection technique shall be permitted for skin effect trace heating equipment in Zone 1 or Zone 2 for which it is listed.

Additional Proposed Changes

File Name	Description	Approved
Table_505.8.docx		

Statement of Problem and Substantiation for Public Input

Section 505.8 has been rewritten for clarity and usability. All protection techniques have been placed into a new table for ease of use.

Submitter Information Verification

Submitter Full Name: David Hittinger
Organization: IEC
Affiliation: IEC
Street Address:
City:
State:
Zip:
Submittal Date: Wed Sep 09 10:23:13 EDT 2020
Committee: NEC-P14

Committee Statement

Resolution: FR-8634-NFPA 70-2021

Statement: The text has been revised to reference Table 13 in Chapter 9. Informational Note No. 1 is reworded to meet the requirements of NEC® Style Manual 3.1.3.1. This is simply an editorial change and not intended to change the intent of the informational note. The dates of the referenced standards have been updated.

505.8 Protection Techniques.

(A) General. Acceptable protection techniques for electrical and electronic equipment in hazardous (classified) locations are as follows:
(B) Flameproof Enclosure “d”.
(C) Pressurized Enclosure “p”.
(D) Intrinsic Safety “i”.
(E) Type of Protection “n”.
(F) Liquid Immersion “o”.
(G) Increased Safety “e”.
(H) Encapsulation “m”.
(I) Powder Filling “q”.
(J) Combustible Gas Detection System.
(K) Electrical Resistance Trace Heating “60079-30-1”.
(L) Inherently Safe Optical Radiation “op is”.
(M) Protected Optical Radiation “op pr”.
(N) Optical System With Interlock “op sh”.
(O) Skin Effect Trace Heating “IEEE 844.1”.

(B) Table 500.8.

The protection techniques listed in 505.8(A) shall be permitted in Zone 0, 1, and 2 locations as described in Table 500.8.

shall be as ~~described in 505.8(A) through (N).~~

Insert new Table 505.8.

Protection Technique	Zone 0	Zone 1	Zone 2
Flameproof Enclosure "d"		x	x
Pressurized Enclosure "p"		x	x

Formatted: Font: (Default) Times New Roman, 12 pt

Formatted: Font: (Default) Times New Roman, 12 pt

Formatted: Font: (Default) Times New Roman, 12 pt

Formatted: Tab stops: 0.56", Left

Formatted: Indent: Left: 0"

Formatted: Font: (Default) Times New Roman, 12 pt

Formatted: Normal, Indent: Left: 0.25", No bullets or numbering

Formatted: List Paragraph

Intrinsic Safety "I"	x	x	x
Type of protection "n"			x
Liquid Immersion "0"		x	x
Increased Safety "e"		x	x
Encapsulation "m"	x	x	x
Power Filling "q"		x	x
Combustible Gas Detection System		x	
Protection by Electrical Resistance Trace Heating "60079-30-1"		x	x
Inherently Safe Optical Radiational "op is"	x	x	x
Protected Optical Radiation "op pr"		x	x
Optical System with Interlock "op sh"	x	x	x
Protection by Skin Effect Heat Trace Heating "IEEE 844.1		x	x

Informational Note No. 1: For additional information, see ANSI/ISA-60079-0-2013, *Explosive Atmospheres — Part 0: Equipment — General Requirements*; ANSI/ISA-12.01.01-2013, *Definitions and Information Pertaining to Electrical Equipment in Hazardous (Classified) Locations*; and ANSI/UL 60079–0-2013, *Explosive Atmospheres — Part 0: Equipment General Requirements*.
Informational Note No. 2: See Table 505.9(C)(2)(4) for descriptions of subdivisions of protection techniques.

~~(A) Flameproof Enclosure "d".~~

~~This protection technique shall be permitted for equipment in Zone 1 or Zone 2 locations.~~

~~(B) Pressurized Enclosure "p".~~

~~This protection technique shall be permitted for equipment in those Zone 1 or Zone 2 locations for which it is identified.~~

~~(C) Intrinsic Safety "i".~~

~~This protection technique shall be permitted for apparatus and associated apparatus for Zone 0, Zone 1, or Zone 2 locations for which it is listed.~~

~~(D) Type of Protection "n".~~

~~This protection technique shall be permitted for equipment in Zone 2 locations. Type of protection "n" is further subdivided into nA, nC, and nR.~~

~~(E) Liquid Immersion "o".~~

~~This protection technique shall be permitted for equipment in Zone 1 or Zone 2 locations.~~

~~(F) Increased Safety "e".~~

~~This protection technique shall be permitted for equipment in Zone 1 or Zone 2 locations.~~

~~(G) Encapsulation "m".~~

~~This protection technique shall be permitted for equipment in Zone 0, Zone 1, or Zone 2 locations for which it is identified.~~

~~(H) Powder Filling "q".~~

~~This protection technique shall be permitted for equipment in Zone 1 or Zone 2 locations.~~

(C)~~(I)~~ Combustible Gas Detection System.

A combustible gas detection system shall be permitted as a means of protection in industrial establishments with restricted public access and where the conditions of maintenance and supervision ensure that only qualified persons service the installation.

(1) General.

Any gas detection system utilized as a protection technique shall meet all of the requirements in 505.8(I)(1)(a) through (I)(1)(e).

1. The gas detection equipment used shall be listed for Zone 1 and listed for the detection of the specific gas or vapor to be encountered.
2. The gas detection system shall not utilize portable or transportable equipment, or temporary wiring methods.
3. The gas detection system shall only use point-type sensors. The system shall be permitted to be augmented with open-path (line-of-sight)–type sensors, but open-path type sensors shall not be the basis for this protection technique.
4. The type of detection equipment, its listing, installation location(s), alarm and shutdown criteria, and calibration frequency shall be documented where combustible gas detectors are used as a protection technique.
5. The applications for the use of combustible gas detection systems as a protection technique shall be limited to 505.8(I)(2), (I)(3), or (I)(4).

Informational Note No. 1: For further information, see ANSI/ISA-TR12.13.03-2009, *Guide for Combustible Gas Detection as a Method of Protection*.

Informational Note No. 2: For further information, see ANSI/ISA-60079-29-1 (12.13.01)-2013, *Explosive Atmospheres — Part 29-1: Gas detectors — Performance requirements of detectors for flammable gases.*

Informational Note No. 3: For further information, see ANSI/API RP 505-2018, *Recommended Practice for Classification of Locations for Electrical Installations at Petroleum Facilities Classified as Class I, Zone 0, Zone 1, and Zone 2*.

Informational Note No. 4: For further information, see ANSI/ISA-60079-29-2-2012, *Explosive Atmospheres — Part 29-2: Gas detectors — Selection, installation, use and maintenance of detectors for flammable gases and oxygen*.

(2) Inadequate Ventilation.
A location, enclosed space, or building that is classified as a Zone 1 location due to inadequate ventilation, that is provided with a combustible gas detection system will be allowed to utilize electrical equipment, installation methods, and wiring practices suitable for Zone 2 installations. Sensing a gas concentration of not more than 40 percent of the lower flammable limit or a gas detector system malfunction shall activate an alarm (audible or visual, or both, as most appropriate for the area).

(3) Interior of a Building or Enclosed Space.
Any building or enclosed space that does not contain a source of flammable gas or vapors that is located in, or with an opening into, a Zone 2 hazardous (classified) location that is provided with a combustible gas detection system will be permitted to utilize electrical equipment, installation methods, and wiring practices suitable for unclassified installations under all of the following conditions:

1. An alarm (audible or visual, or both) shall be sounded at not more than 20 percent of the lower flammable limit.
2. Sensing a gas concentration of not more than 40 percent of the lower flammable limit or a gas detector system malfunction shall both activate an alarm (audible or visual, or both, as most appropriate for the area) and initiate automatic disconnection of power from all electrical devices in the area that are not suitable for Zone 2.
3. The power disconnecting device(s) shall be suitable for Zone 1 if located inside the building or enclosed space. If the disconnecting device(s) is located outside the building or enclosed space, it shall be suitable for the location in which it is installed.

Redundant or duplicate equipment (such as sensors) shall be permitted to be installed to avoid disconnecting electrical power when equipment malfunctions are indicated.
When automatic shutdown could introduce additional or increased hazard, this technique shall not be permitted.

(4) Interior of a Control Panel.
Inside the interior of a control panel containing instrumentation or other equipment utilizing or measuring flammable liquids, gases, or vapors, that is provided with combustible gas detection equipment will be allowed to utilize electrical equipment, installation methods, and wiring practices suitable for Zone 2 installations.

An alarm (audible or visual, or both) shall be sounded at not more than 40 percent of the lower flammable limit.

~~(J) Protection by Electrical Resistance Trace Heating "60079-30-1".~~
~~This protection technique shall be permitted for electrical resistance trace heating equipment in Zone 1 or Zone 2 for which it is listed.~~

~~(K) Inherently Safe Optical Radiation "op is".~~
~~This protection technique shall be permitted for equipment in Zone 0, Zone 1, or Zone 2 locations for which the equipment is identified.~~

~~(L) Protected Optical Radiation "op pr".~~
~~This protection technique shall be permitted for equipment in Zone 1 or Zone 2 locations for which the equipment is identified.~~

~~(M) Optical System With Interlock "op sh".~~
~~This protection technique shall be permitted for equipment in Zone 0, Zone 1, or Zone 2 locations for which the equipment is identified.~~

~~(N) Protection by Skin Effect Trace Heating "IEEE 844.1".~~
~~This protection technique shall be permitted for skin effect trace heating equipment in Zone 1 or Zone 2 for which it is listed.~~

Public Input No. 716-NFPA 70-2020 [Section No. 505.8(I)(1)]

(1)_ General.

Any gas detection system utilized as a protection technique shall meet all of the requirements in 505.8(I)(1)(a) through (I)(1)(e).

(a) The gas detection equipment used shall be listed for Zone 1 and listed for the detection of the specific gas or vapor to be encountered.

(b) The gas detection system shall not utilize portable or transportable equipment, or temporary wiring methods.

(c) The gas detection system shall only use point-type sensors. The system shall be permitted to be augmented with open-path (line-of-sight)–type sensors, but open-path type sensors shall not be the basis for this protection technique.

(d) The type of detection equipment, its listing, installation location(s), alarm and shutdown criteria, and calibration frequency shall be documented where combustible gas detectors are used as a protection technique.

(e) The applications for the use of combustible gas detection systems as a protection technique shall be limited to 505.8(I)(2), (I)(3), or (I)(4).

Informational Note No. 1: For further information, see ANSI/ISA-TR12.13.03-2009, *Guide for Combustible Gas Detection as a Method of Protection*.

Informational Note No. 2: For further information, see ANSI/~~ISA-~~ UL 60079-29-1 ~~(12.13.01)-2013~~ -2019 , *Explosive Atmospheres — Part 29-1: Gas detectors — Performance requirements of detectors for flammable gases.*

Informational Note No. 3: For further information, see ANSI/API RP 505-2018, *Recommended Practice for Classification of Locations for Electrical Installations at Petroleum Facilities Classified as Class I, Zone 0, Zone 1, and Zone 2*.

Informational Note No. 4: For further information, see ANSI/~~ISA-~~ UL 60079-29-2-~~2012~~ 2018 , *Explosive Atmospheres — Part 29-2: Gas detectors — Selection, installation, use and maintenance of detectors for flammable gases and oxygen*.

Statement of Problem and Substantiation for Public Input

ANSI/ISA-60079-29-1 (12.13.01)-2013 and ANSI/ISA-60079-29-2-2012 have been replaced by ANSI/UL 60079-29-1-2019 and ANSI/UL 60079-29-2-2018

See also PI No. 707.

Related Public Inputs for This Document

Related Input	Relationship
Public Input No. 707-NFPA 70-2020 [Section No. 500.7(K)(1)]	
Public Input No. 707-NFPA 70-2020 [Section No. 500.7(K)(1)]	

Submitter Information Verification

Submitter Full Name: Paul Kelly

Organization: UL LLC
Street Address:
City:
State:
Zip:
Submittal Date: Fri Mar 20 14:09:25 EDT 2020
Committee: NEC-P14

Committee Statement

Resolution: FR-8636-NFPA 70-2021

Statement: Update the edition dates of the referenced standards in the informational notes. The changes are as follows: ANSI/ISA-60079-29-1 (12.13.01)-2013 and ANSI/ISA-60079-29-2-2012 have been updated to ANSI/UL/FM 60079-29-1-2019 and ANSI/UL/FM 60079-29-2-2018. The informational notes are reworded to meet the requirements of NEC® Style Manual 3.1.3.1. This is simply an editorial change and not intended to change the intent of the informational note.

Public Input No. 2219-NFPA 70-2020 [New Section after 505.8(N)]

TITLE OF NEW CONTENT

505.8(O) Pressurized Room "p". This protection technique shall be permitted for equipment in Zone 1 or Zone 2 locations for which it is identified.

Statement of Problem and Substantiation for Public Input

Standard UL 60079-13-2020, Explosive Atmospheres – Part 13: Equipment protection by pressurized room “p” and artificially ventilated room “v” has been published. This publication provides requirements for rooms intended for human entry where either pressurization or forced ventilation is used as a means of reducing risk of explosion. Such equipment exists, and with publication of a standard, should be a permitted method of protection.

Related Public Inputs for This Document

Related Input	Relationship
Public Input No. 2217-NFPA 70-2020 [New Definition after Definition: Pressurized Enclosure “p”.]	New permitted means of protection covered by standard UL 60079-13
Public Input No. 2265-NFPA 70-2020 [Definition:]	

Submitter Information Verification

Submitter Full Name: William Fiske
Organization: Intertek Testing Services
Street Address:
City:
State:
Zip:
Submittal Date: Tue Aug 11 15:08:45 EDT 2020
Committee: NEC-P14

Committee Statement

Resolution: FR-8593-NFPA 70-2021

Statement: Accept Type of protection pressurized room “p” which is a specific protection means for rooms and buildings. Remove “Class I”. Under the NEC Division system, there is permission for Other Protection Techniques as described in 500.7(P). This permits the ability for new and innovative designs to be certified for Division 1 or 2

applications that are outside the Scope of other Division system Protection Techniques (e.g. Explosionproof, Intrinsic Safety). This revision provides a similar permission under the NEC Zone system. Add Protection by Impedance Heating "IEEE 844.3” acknowledging the product standard and to permit the installation of that equipment.

Public Input No. 727-NFPA 70-2020 [New Section after 505.8(N)]

(O) Special Protection "s": This protection technique shall be permitted for apparatus and associated apparatus in Class I, Zone 0, Zone 1, or Zone 2 locations for which it is listed.

Statement of Problem and Substantiation for Public Input

Under the NEC Division system, there is permission for Other Protection Techniques as described in 500.7(L). This permits the ability for new and innovative designs to be certified for Division 1 or 2 applications that are outside the Scope of other Division system Protection Techniques (e.g. Explosionproof, Intrinsic Safety, and Dust Ignitionproof).

While there is no such permission under the NEC Zone system, there is such permission under the IEC Zone system based on IEC 60079-33, Explosive atmospheres – Part 33: Equipment protection by special protection “s”. The U.S. is in the process of adopting IEC 60079-33 as ANSI/UL 60079-33 with National differences. This adoption is expected to be in place prior to the Second Draft Public Comment Closing Date.

The anticipated ANSI/UL 60079-33 (as with the existing IEC 60079-33) is only intended for equipment that is outside the Scope of other ANSI/UL 60079 series protection technique standards.

Also see PI Nos. 726, 728, 729 and 730.

Related Public Inputs for This Document

Related Input	Relationship
Public Input No. 726-NFPA 70-2020 [New Definition after Definition: Spray Room.]	
Public Input No. 728-NFPA 70-2020 [Section No. 505.9(C)(2)]	
Public Input No. 729-NFPA 70-2020 [New Section after 506.8(N)]	
Public Input No. 730-NFPA 70-2020 [Section No. 506.9(C)(2)]	
Public Input No. 726-NFPA 70-2020 [New Definition after Definition: Spray Room.]	
Public Input No. 728-NFPA 70-2020 [Section No. 505.9(C)(2)]	
Public Input No. 729-NFPA 70-2020 [New Section after 506.8(N)]	
Public Input No. 730-NFPA 70-2020 [Section No. 506.9(C)(2)]	

Submitter Information Verification

Submitter Full Name: Paul Kelly
Organization: UL LLC
Street Address:
City:
State:
Zip:
Submittal Date: Fri Mar 20 16:51:31 EDT 2020
Committee: NEC-P14

Committee Statement

Resolution: FR-8593-NFPA 70-2021

Statement: Accept Type of protection pressurized room “p” which is a specific protection means for rooms and buildings. Remove “Class I”. Under the NEC Division system, there is permission for Other Protection Techniques as described in 500.7(P). This permits the ability for new and innovative designs to be certified for Division 1 or 2

applications that are outside the Scope of other Division system Protection Techniques (e.g. Explosionproof, Intrinsic Safety). This revision provides a similar permission under the NEC Zone system. Add Protection by Impedance Heating "IEEE 844.3” acknowledging the product standard and to permit the installation of that equipment.

Public Input No. 2258-NFPA 70-2020 [Section No. 505.8(N)]

(N) Protection by Skin Effect Trace Heating “IEEE 844.1”.

This protection technique shall be permitted for skin effect trace heating equipment in Zone 1 or Zone 2 for which it is listed.

(O) Protection by Impedance Heating "IEEE 844.3"

This protection technique shall be permitted for impedance heating of pipelines, and equipment in Zone 2 for which it is listed.

Statement of Problem and Substantiation for Public Input

This proposal updates information from industry standards. It makes available the most up-to-date product and marking requirements and provides criteria to determine the suitability when utilized in industrial and commercial applications. The information should help provide electrical, mechanical durability such that in normal use its performance is reliable and poses no danger to the user or surroundings

Submitter Information Verification

Submitter Full Name: Ben Johnson
Organization: [Not Specified]
Affiliation: Thermon
Street Address:
City:
State:
Zip:
Submittal Date: Wed Aug 12 14:01:00 EDT 2020
Committee: NEC-P14

Committee Statement

Resolution: FR-8593-NFPA 70-2021

Statement: Accept Type of protection pressurized room “p” which is a specific protection means for rooms and buildings. Remove “Class I”. Under the NEC Division system, there is permission for Other Protection Techniques as described in 500.7(P). This permits the ability for new and innovative designs to be certified for Division 1 or 2

applications that are outside the Scope of other Division system Protection Techniques (e.g. Explosionproof, Intrinsic Safety). This revision provides a similar permission under the NEC Zone system. Add Protection by Impedance Heating "IEEE 844.3” acknowledging the product standard and to permit the installation of that equipment.

Public Input No. 715-NFPA 70-2020 [Section No. 505.8 [Excluding any Sub-Sections]]

Acceptable protection techniques for electrical and electronic equipment in hazardous (classified) locations shall be as described in 505.8(A) through (N).

Informational Note No. 1: For additional information, see ANSI/~~ISA-60079-0-2013, *Explosive Atmospheres — Part 0: Equipment — General Requirements* ; ANSI/ISA-12.01.01-2013,~~ UL 120101-2019, *Definitions and Information Pertaining to Electrical Equipment in Hazardous (Classified) Locations*; and ANSI/UL 60079–0-~~2013~~ 2019 , *Explosive Atmospheres — Part 0: Equipment General Requirements*.

Informational Note No. 2: See Table 505.9(C)(2)(4) for descriptions of subdivisions of protection techniques.

Statement of Problem and Substantiation for Public Input

ANSI/ISA-60079-0-2013 and ANSI/ISA-12.01.01-2013 have been replaced by ANSI/UL 60079–0-2019 and UL 120101-2019.

Submitter Information Verification

Submitter Full Name: Paul Kelly
Organization: UL LLC
Street Address:
City:
State:
Zip:
Submittal Date: Fri Mar 20 14:00:52 EDT 2020
Committee: NEC-P14

Committee Statement

Resolution: FR-8634-NFPA 70-2021

Statement: The text has been revised to reference Table 13 in Chapter 9. Informational Note No. 1 is reworded to meet the requirements of NEC® Style Manual 3.1.3.1. This is simply an editorial change and not intended to change the intent of the informational note. The dates of the referenced standards have been updated.

Public Input No. 2220-NFPA 70-2020 [New Section after 505.9]

TITLE OF NEW CONTENT

505.8(P) Artificially Ventilated Room "v". This protection technique shall be permitted in Zone 2 locations for which it is identified.

Statement of Problem and Substantiation for Public Input

Standard UL 60079-13-2020, Explosive Atmospheres – Part 13: Equipment protection by pressurized room “p” and artificially ventilated room “v” has been published. This publication provides requirements for rooms intended for human entry where either pressurization or forced ventilation is used as a means of reducing risk of explosion. Such equipment exists, and with publication of a standard, should be a permitted method of protection.

Related Public Inputs for This Document

Related Input	Relationship
Public Input No. 2217-NFPA 70-2020 [New Definition after Definition: Pressurized Enclosure “p”.]	Table 505.9(C)(2)(4) summarizes protection methods.

Submitter Information Verification

Submitter Full Name: William Fiske
Organization: Intertek Testing Services
Street Address:
City:
State:
Zip:
Submittal Date: Tue Aug 11 15:13:27 EDT 2020
Committee: NEC-P14

Committee Statement

Resolution: FR-8648-NFPA 70-2021

Statement: This action adds new Table 13 covering protection techniques for hazardous (classified) locations to Chapter 9. The new table to replaces existing tables in Article 505 and 506 with one comprehensive Table addressing all of the Protection Techniques or Types of Protection for Hazardous Locations. This action also incorporates the recommendations of PIs 2220, 2263, 722 and 728.

Public Input No. 2263-NFPA 70-2020 [Section No. 505.9(C)(2)]

(2) Zone Equipment.

Equipment meeting one or more of the protection techniques described in 505.8 shall be marked with all of the following in the order shown:

(1) Class I (equipment shall be permitted to omit the Class I marking)

(2) Zone [in accordance with Table 505.9(C)(2)(4)]

(3) Symbol “AEx”

(4) Protection technique(s) in accordance with Table 505.9(C)(2)(4)

(5) Applicable material group in accordance with Table 505.9(C)(1)(2) or a specific gas or vapor

(6) Temperature classification in accordance with 505.9(D)(1)

(7) Equipment protection level (EPL)

Exception No. 1: Associated apparatus NOT suitable for installation in a hazardous (classified) location shall be required to be marked only with (3), (4), and (5), but BOTH the symbol AEx (3) and the symbol for the type of protection (4) shall be enclosed within the same square brackets, for example, [AEx ia Ga] IIC.

Exception No. 2: Simple apparatus as defined in Article 100 Part III shall not be required to have a marked operating temperature or temperature class.

Exception No. 3: Fittings for the termination of cables shall not be required to have a marked operating temperature or temperature class.

Informational Note No. 1: An example of the required marking for intrinsically safe apparatus for installation in Zone 0 is “Class I, Zone 0, AEx ia IIC T6 Ga” or “Zone 0, AEx, ia, IIC T6 Gb.” An explanation of the marking that is required is shown in Informational Note Figure 505.9(C)(2), No. 1.

Informational Note No. 2: An example of the required marking for intrinsically safe associated apparatus mounted in a flameproof enclosure for installation in Zone 1 is “Class I, Zone 1 AEx db[ia] IIC T4 Gb” or “Zone 1, AEx, db[ia Ga] IIC T4 Gb.”

Informational Note No. 3: An example of the required marking for intrinsically safe associated apparatus NOT for installation in a hazardous (classified) location is “[AEx ia Ga] IIC.”

Informational Note No. 4: EPLs (or equipment protection levels) are designated as G for gas or D for dust and are then followed by a letter (a, b, or c) to give the user a better understanding as to whether the equipment provides either (a) a “very high,” (b) a “high,” or (c) an “enhanced” level of protection against ignition of an explosive atmosphere. For example, a Zone 1, AEx db IIC T4 Gb motor (which is suitable by protection concept for application in Zone 1) is marked with an EPL of “Gb” to indicate that it was provided with a high level of protection.

Informational Note No. 5: Equipment installed outside a Zone 0 location, electrically connected to equipment located inside a Zone 0 location, may be marked Zone 0/1. The “/” indicates that equipment contains a separation element and can be installed at the boundary between a Zone 0 and a Zone 1 location. See ANSI/UL-60079-26-2017, *Explosive Atmospheres — Part 26: Equipment with Equipment Protection Level (EPL) Ga*.

Figure Informational Note Figure 505.9(C)(2), No. 1 Zone Equipment Marking.

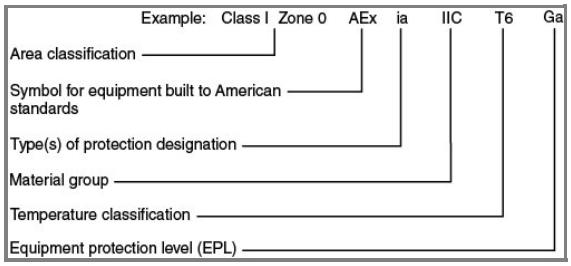

Table 505.9(C)(2)(4) Equipment Suitability

Type of Protection	Marking	Permitted Location
Associated apparatus for Zone 0	[ia]	Unclassified[1]
Associated apparatus for Zone 1	[ib]	Unclassified[1]
Associated apparatus for Zone 2	[ic]	Unclassified[1]
Associated pressurization equipment	[p]	Unclassified[1]
Intrinsic safety	ia; Class I, Division 1 Intrinsic Safety	Zone 0
Encapsulation	ma	
Optical radiation, inherently safe	op is, with EPL Ga[2]	
Optical radiation, with interlock	op sh, with EPL Ga[2]	
EPL Ga, with suitable type of protection[3]		
Equipment Suitable for Use in Zone 0		Zone 1
Equipment Suitable for Use in Class I, Division 1		
Flameproof enclosure	d; db	
Intrinsic safety	ib	
Increased safety	e; eb	
Pressurized enclosure	p; px, pxb; py; pyb	
Encapsulation	m; mb	
Powder filling	q; qb	
Liquid immersion	o; ob	
Electrical resistance trace heating	60079-30-1, with EPL Gb[2]	
Skin effect trace heating	IEEE 844.1, with EPL Gb[2]	
Optical radiation, inherently safe	op is, with EPL Gb[2]	
Optical radiation, with interlock	op sh, with EPL Gb[2]	
Optical radiation, protected	op pr, with EPL Gb[2]	
EPL Gb, with suitable type of protection[3]		
Equipment Suitable for Use in Zone 1		Zone 2
Equipment Suitable for Use in Class I, Division 2		
Type of protection “n”	nA; nC; nR	
Pressurized enclosure	pz, pzc	
Intrinsic safety	ic	
Flameproof enclosure	dc	
Increased safety	ec	
Liquid immersion	oc	
Encapsulation	mc	
Electrical resistance trace heating	60079-30-1, *with EPL Gc*[2]	
Skin effect trace heating	IEEE 844.1, with EPL Gc[2]	
Optical radiation, inherently safe	op is, *with EPL Gc*[2]	

Type of Protection	Marking	Permitted Location
Optical radiation, with interlock	op sh, *with EPL Gc*[2]	
Optical radiation, protected	op pr, *with EPL Gc*[2]	
EPL Gc, with suitable type of protection[3]		
Other electrical equipment — general purpose motors[4]		

[1]Permitted to be installed in a hazardous (classified) location if suitably protected using another type of protection.

[2]Equipment marked with these types of protection is available in multiple levels of protection that are not specifically identified within the AEx marking.

[3]The EPL takes precedence over the types of protection. For example, “ia Gb” is suitable for Zone 1 (not Zone 0). “60079-30-1 Gc” is suitable for Zone 2 (not Zone 1). Selection according to the marked EPL is critical to the safe application of this equipment.

[4]“Other electrical equipment — general purpose motors” refers to motors in accordance with Exception No. 4 to 505.20(C).

Additional Proposed Changes

File Name	Description	Approved
Table_505.9C24.docx	Added protection methods	

Statement of Problem and Substantiation for Public Input

Standard UL 60079-13-2020, Explosive Atmospheres – Part 13: Equipment protection by pressurized room “p” and artificially ventilated room “v” has been published. This publication provides requirements for rooms intended for human entry where either pressurization or forced ventilation is used as a means of reducing risk of explosion. Such equipment exists, and with publication of a standard, should be a permitted method of protection. This adds the markings for pressurized rooms (Zone 1 and Zone 2) and ventilated rooms (Zone 2)

Related Public Inputs for This Document

Related Input	Relationship
Public Input No. 2217-NFPA 70-2020 [New Definition after Definition: Pressurized Enclosure “p”.]	

Submitter Information Verification

Submitter Full Name: William Fiske
Organization: Intertek Testing Services
Street Address:
City:
State:
Zip:
Submittal Date: Wed Aug 12 15:43:53 EDT 2020
Committee: NEC-P14

Committee Statement

Resolution: FR-8648-NFPA 70-2021

Statement: This action adds new Table 13 covering protection techniques for hazardous (classified) locations to Chapter 9. The new table to replaces existing tables in Article 505 and 506 with one comprehensive Table addressing all of the Protection Techniques or Types of Protection for Hazardous Locations. This action also incorporates the recommendations of PIs 2220, 2263, 722 and 728.

Table 505.9(C)(2)(4) Equipment Suitability

Type of Protection	Marking	Permitted Location
Equipment Suitable for Use in Zone 0		
Equipment Suitable for Use in Class I, Division 1		
Flameproof enclosure	d; db	
Intrinsic safety	ib	
Pressurized enclosure	p; px; pxb; py; pyb	
Pressurized room	p; pb	
Encapsulation	m; mb	
Powder filling	q; qb	Zone 1
Liquid immersion	o; ob	
[Continue Zone 1 section without changes]		
Equipment Suitable for Use in Zone 1		
Equipment Suitable for Use Class I, Division 2		
Type of Protection "n"	nA; nC; nR	
Pressurized enclosure	pz; pzc	
Pressurized room	p; pb; pc	
Ventilated room	v; vc	
Intrinsic safety	ic	
Flameproof enclosure	dc	
Increased safety	ec	
Liquid immersion	oc	
Encapsulation	mc	Zone 2
Electrical resistance trace heating	60079-30-1, *with EPL Gc*	
[Continue Zone 2 section without changes]		

Public Input No. 2283-NFPA 70-2020 [Section No. 505.9(C)(2)]

(2) Zone Equipment.

Equipment meeting one or more of the protection techniques described in 505.8 shall be marked with all of the following in the order shown:

(1) Class I (equipment shall be permitted to omit the Class I marking)

(2) Zone [in accordance with Table 505.9(C)(2)(4)]

(3) Symbol "AEx"

(4) Protection technique(s) in accordance with Table ~~505.9~~ 13 (~~C)(2)(4)~~ Proposed)

(5) Applicable material group in accordance with Table 505.9(C)(1)(2) or a specific gas or vapor

(6) Temperature classification in accordance with 505.9(D)(1)

(7) Equipment protection level (EPL)

Exception No. 1: Associated apparatus NOT suitable for installation in a hazardous (classified) location shall be required to be marked only with (3), (4), and (5), but BOTH the symbol AEx (3) and the symbol for the type of protection (4) shall be enclosed within the same square brackets, for example, [AEx ia Ga] IIC.

Exception No. 2: Simple apparatus as defined in Article 100 Part III shall not be required to have a marked operating temperature or temperature class.

Exception No. 3: Fittings for the termination of cables shall not be required to have a marked operating temperature or temperature class.

Informational Note No. 1: An example of the required marking for intrinsically safe apparatus for installation in Zone 0 is "Class I, Zone 0, AEx ia IIC T6 Ga" or "Zone 0, AEx, ia, IIC T6 Gb." An explanation of the marking that is required is shown in Informational Note Figure 505.9(C)(2), No. 1.

Informational Note No. 2: An example of the required marking for intrinsically safe associated apparatus mounted in a flameproof enclosure for installation in Zone 1 is "Class I, Zone 1 AEx db[ia] IIC T4 Gb" or "Zone 1, AEx, db[ia Ga] IIC T4 Gb."

Informational Note No. 3: An example of the required marking for intrinsically safe associated apparatus NOT for installation in a hazardous (classified) location is "[AEx ia Ga] IIC."

Informational Note No. 4: EPLs (or equipment protection levels) are designated as G for gas or D for dust and are then followed by a letter (a, b, or c) to give the user a better understanding as to whether the equipment provides either (a) a "very high," (b) a "high," or (c) an "enhanced" level of protection against ignition of an explosive atmosphere. For example, a Zone 1, AEx db IIC T4 Gb motor (which is suitable by protection concept for application in Zone 1) is marked with an EPL of "Gb" to indicate that it was provided with a high level of protection.

Informational Note No. 5: Equipment installed outside a Zone 0 location, electrically connected to equipment located inside a Zone 0 location, may be marked Zone 0/1. The "/" indicates that equipment contains a separation element and can be installed at the boundary between a Zone 0 and a Zone 1 location. See ANSI/UL-60079-26-2017, *Explosive Atmospheres — Part 26: Equipment with Equipment Protection Level (EPL) Ga*.

Figure Informational Note Figure 505.9(C)(2), No. 1 Zone Equipment Marking.

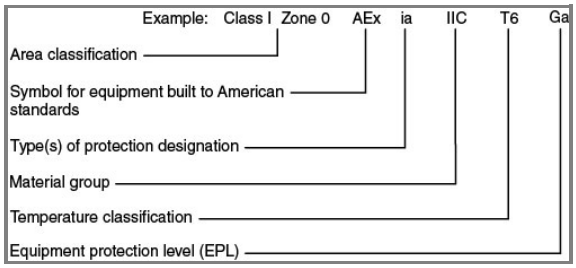

~~Table 505.9(C)(2)(4) Equipment Suitability~~

~~Type of Protection Marking Permitted Location Associated apparatus for Zone 0 [ia] Unclassified [1] Associated apparatus for Zone 1 [ib] Unclassified [1] Associated apparatus for Zone 2 [ic] Unclassified [1] Associated pressurization equipment [p] Unclassified [1] Intrinsic safety ia; Class I, Division 1 Intrinsic Safety Zone 0 Encapsulation ma Optical radiation, inherently safe op is, with EPL Ga [2] Optical radiation, with interlock op sh, with EPL Ga [2] EPL Ga, with suitable type of protection [3] - Equipment Suitable for Use in Zone 0 Zone 1 Equipment Suitable for Use in Class I, Division 1 Flameproof enclosure d; db Intrinsic safety ib Increased safety e; eb Pressurized enclosure p; px, pxb; py; pyb Encapsulation m; mb Powder filling q; qb Liquid immersion o; ob Electrical resistance trace heating 60079-30-1, with EPL Gb [2] Skin effect trace heating IEEE 844.1, with EPL Gb [2] Optical radiation, inherently safe op is, with EPL Gb [2] Optical radiation, with interlock op sh, with EPL Gb [2] Optical radiation, protected op pr, with EPL Gb [2] EPL Gb, with suitable type of protection [3] Equipment Suitable for Use in Zone 1 Zone 2 Equipment Suitable for Use in Class I, Division 2 Type of protection "n" nA; nC; nR Pressurized enclosure pz, pzc Intrinsic safety ic Flameproof enclosure dc Increased safety ec Liquid immersion oc Encapsulation mc Electrical resistance trace heating 60079-30-1, *with EPL Gc* [2] Skin effect trace heating IEEE 844.1, with EPL Gc [2] Optical radiation, inherently safe op is, *with EPL Gc* [2] Optical radiation, with interlock op sh, *with EPL Gc* [2] Optical radiation, protected op pr, *with EPL Gc* [2] EPL Gc, with suitable type of protection [3] Other electrical equipment — general purpose motors [4]~~

~~[1] Permitted to be installed in a hazardous (classified) location if suitably protected using another type of protection.~~

~~[2] Equipment marked with these types of protection is available in multiple levels of protection that are not specifically identified within the AEx marking.~~

~~[3] The EPL takes precedence over the types of protection. For example, "ia Gb" is suitable for Zone 1 (not Zone 0). "60079-30-1 Gc" is suitable for Zone 2 (not Zone 1). Selection according to the marked EPL is critical to the safe application of this equipment.~~

~~[4] "Other electrical equipment — general purpose motors" refers to motors in accordance with Exception No. 4 to 505.20(C).~~

Statement of Problem and Substantiation for Public Input

Replace the existing table with a comprehensive Table addressing all of the Protection Techniques or Types of Protection for Hazardous Locations in Articles 500 through 506.

Submitter Information Verification

Submitter Full Name: William Lawrence
Organization:
Street Address:
City:
State:
Zip:
Submittal Date: Thu Aug 13 15:36:15 EDT 2020
Committee: NEC-P14

Committee Statement

Resolution: FR-8639-NFPA 70-2021

Statement: This action deletes Table 505.9(C)(2)(4) and revises the text in 505.9 (C)(2)(4) to reference new Table 13 in Chapter 9 created by the action on Public Input 2287.

Public Input No. 722-NFPA 70-2020 [Section No. 505.9(C)(2)]

(2)_ Zone Equipment.

Equipment meeting one or more of the protection techniques described in 505.8 shall be marked with all of the following in the order shown:

(1) Class I (equipment shall be permitted to omit the Class I marking)

(2) Zone [in accordance with Table 505.9(C)(2)(4)]

(3) Symbol “AEx”

(4) Protection technique(s) in accordance with Table 505.9(C)(2)(4)

(5) Applicable material group in accordance with Table 505.9(C)(1)(2) or a specific gas or vapor

(6) Temperature classification in accordance with 505.9(D)(1)

(7) Equipment protection level (EPL)

Exception No. 1: Associated apparatus NOT suitable for installation in a hazardous (classified) location shall be required to be marked only with (3), (4), and (5), but BOTH the symbol AEx (3) and the symbol for the type of protection (4) shall be enclosed within the same square brackets, for example, [AEx ia Ga] IIC.

Exception No. 2: Simple apparatus as defined in Article 100 Part III shall not be required to have a marked operating temperature or temperature class.

Exception No. 3: Fittings for the termination of cables shall not be required to have a marked operating temperature or temperature class.

Informational Note No. 1: An example of the required marking for intrinsically safe apparatus for installation in Zone 0 is “Class I, Zone 0, AEx ia IIC T6 Ga” or “Zone 0, AEx, ia, IIC T6 Gb.” An explanation of the marking that is required is shown in Informational Note Figure 505.9(C)(2), No. 1.

Informational Note No. 2: An example of the required marking for intrinsically safe associated apparatus mounted in a flameproof enclosure for installation in Zone 1 is “Class I, Zone 1 AEx db[ia] IIC T4 Gb” or “Zone 1, AEx, db[ia Ga] IIC T4 Gb.”

Informational Note No. 3: An example of the required marking for intrinsically safe associated apparatus NOT for installation in a hazardous (classified) location is “[AEx ia Ga] IIC.”

Informational Note No. 4: EPLs (or equipment protection levels) are designated as G for gas or D for dust and are then followed by a letter (a, b, or c) to give the user a better understanding as to whether the equipment provides either (a) a “very high,” (b) a “high,” or (c) an “enhanced” level of protection against ignition of an explosive atmosphere. For example, a Zone 1, AEx db IIC T4 Gb motor (which is suitable by protection concept for application in Zone 1) is marked with an EPL of “Gb” to indicate that it was provided with a high level of protection.

Informational Note No. 5: Equipment installed outside a Zone 0 location, electrically connected to equipment located inside a Zone 0 location, may be marked Zone 0/1. The “/” indicates that equipment contains a separation element and can be installed at the boundary between a Zone 0 and a Zone 1 location. See ANSI/UL-60079-26-2017, *Explosive Atmospheres — Part 26: Equipment with Equipment Protection Level (EPL) Ga*.

Figure Informational Note Figure 505.9(C)(2), No. 1 Zone Equipment Marking.

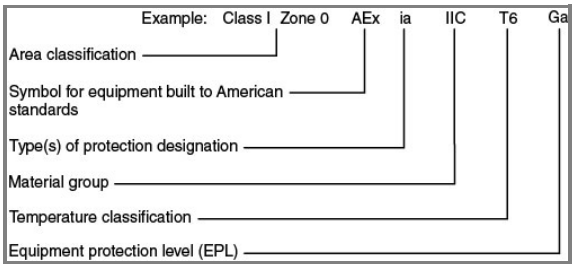

Table 505.9(C)(2)(4) Equipment Suitability

Type of Protection	Marking	Permitted Location
Associated apparatus for Zone 0	[ia]	Unclassified [1]
Associated apparatus for Zone 1	[ib]	Unclassified [1]
Associated apparatus for Zone 2	[ic]	Unclassified [1]
Associated pressurization equipment	[p]	Unclassified [1]
Associated optical radiation equipment	[op is], [op pr], [op sh]	Unclassified [5, 6]
Intrinsic safety	ia; Class I, Division 1 Intrinsic Safety	
Encapsulation	ma	
Optical radiation, inherently safe	op is, with EPL Ga [2]	Zone 0
Optical radiation, with interlock	op sh, with EPL Ga [2]	
EPL Ga, with suitable type of protection [3]		
-		
Equipment Suitable for Use in Zone 0		
Equipment Suitable for Use in Class I, Division 1		
Flameproof enclosure	d; db	
Intrinsic safety	ib	
Increased safety	e; eb	
Pressurized enclosure	p; px, pxb; py; pyb	
Encapsulation	m; mb	
Powder filling	q; qb	
Liquid immersion	o; ob	Zone 1
Electrical resistance trace heating	60079-30-1, with EPL Gb [2]	
Skin effect trace heating	IEEE 844.1, with EPL Gb [2]	
Optical radiation, inherently safe	op is, with EPL Gb [2]	
Optical radiation, with interlock	op sh, with EPL Gb [2]	
Optical radiation, protected	op pr, with EPL Gb [2]	
EPL Gb, with suitable type of protection [3]		
Equipment Suitable for Use in Zone 1		
Equipment Suitable for Use in Class I, Division 2		
Type of protection “n”	nA; nC; nR	
Pressurized enclosure	pz, pzc	
Intrinsic safety	ic	Zone 2
Flameproof enclosure	dc	
Increased safety	ec	
Liquid immersion	oc	
Encapsulation	mc	
Electrical resistance trace heating	60079-30-1, *with EPL Gc* [2]	

Skin effect trace heating	IEEE 844.1, with EPL Gc [2]
Optical radiation, inherently safe	op is, *with EPL Gc* [2]
Optical radiation, with interlock	op sh, *with EPL Gc* [2]
Optical radiation, protected	op pr, *with EPL Gc* [2]
EPL Gc, with suitable type of protection [3]	
Other electrical equipment — general purpose motors [4]	

[1]Permitted to be installed in a hazardous (classified) location if suitably protected using another type of protection.

[2]Equipment marked with these types of protection is available in multiple levels of protection that are not specifically identified within the AEx marking.

[3]The EPL takes precedence over the types of protection. For example, “ia Gb” is suitable for Zone 1 (not Zone 0). “60079-30-1 Gc” is suitable for Zone 2 (not Zone 1). Selection according to the marked EPL is critical to the safe application of this equipment.

[4] “Other electrical equipment — general purpose motors” refers to motors in accordance with Exception No. 4 to 505.20(C).

[5] Permitted to be installed in unclassified locations if Gas Group, Temperature Classification, and EPL are indicated within the brackets as applicable.

[6] Permitted to be installed in Hazardous (classified) locations if suitably protected using another type of protection, and if Gas Group, Temperature Classification, and EPL are indicated within the brackets as applicable.

Statement of Problem and Substantiation for Public Input

ANSI/UL 60079-28 permits associated optical radiation equipment. While UL 60079-28 only shows “op is” as an example of an associated type of protection, optical fiber cable could be part of a piece of “op pr” equipment installed outside the explosive atmosphere, with the cable extending into the atmosphere. Based on this, it would seem that [AEx op pr] could be an option too, with a similar argument being for [AEx op sh].

See also PI No. 723.

Related Public Inputs for This Document

Related Input	Relationship
Public Input No. 723-NFPA 70-2020 [Section No. 506.9(C)(2)]	
Public Input No. 723-NFPA 70-2020 [Section No. 506.9(C)(2)]	

Submitter Information Verification

Submitter Full Name: Paul Kelly
Organization: UL LLC
Street Address:
City:
State:
Zip:
Submittal Date: Fri Mar 20 14:42:20 EDT 2020
Committee: NEC-P14

Committee Statement

Resolution: FR-8648-NFPA 70-2021

Statement: This action adds new Table 13 covering protection techniques for hazardous (classified) locations to Chapter 9. The new table to replaces existing tables in Article 505 and 506 with one comprehensive Table addressing all of the Protection Techniques or Types of Protection for Hazardous Locations. This action also incorporates the recommendations of PIs 2220, 2263, 722 and 728.

Public Input No. 728-NFPA 70-2020 [Section No. 505.9(C)(2)]

(2)_ Zone Equipment.

Equipment meeting one or more of the protection techniques described in 505.8 shall be marked with all of the following in the order shown:

(1) Class I (equipment shall be permitted to omit the Class I marking)

(2) Zone [in accordance with Table 505.9(C)(2)(4)]

(3) Symbol “AEx”

(4) Protection technique(s) in accordance with Table 505.9(C)(2)(4)

(5) Applicable material group in accordance with Table 505.9(C)(1)(2) or a specific gas or vapor

(6) Temperature classification in accordance with 505.9(D)(1)

(7) Equipment protection level (EPL)

Exception No. 1: Associated apparatus NOT suitable for installation in a hazardous (classified) location shall be required to be marked only with (3), (4), and (5), but BOTH the symbol AEx (3) and the symbol for the type of protection (4) shall be enclosed within the same square brackets, for example, [AEx ia Ga] IIC.

Exception No. 2: Simple apparatus as defined in Article 100 Part III shall not be required to have a marked operating temperature or temperature class.

Exception No. 3: Fittings for the termination of cables shall not be required to have a marked operating temperature or temperature class.

Informational Note No. 1: An example of the required marking for intrinsically safe apparatus for installation in Zone 0 is “Class I, Zone 0, AEx ia IIC T6 Ga” or “Zone 0, AEx, ia, IIC T6 Gb.” An explanation of the marking that is required is shown in Informational Note Figure 505.9(C)(2), No. 1.

Informational Note No. 2: An example of the required marking for intrinsically safe associated apparatus mounted in a flameproof enclosure for installation in Zone 1 is “Class I, Zone 1 AEx db[ia] IIC T4 Gb” or “Zone 1, AEx, db[ia Ga] IIC T4 Gb.”

Informational Note No. 3: An example of the required marking for intrinsically safe associated apparatus NOT for installation in a hazardous (classified) location is “[AEx ia Ga] IIC.”

Informational Note No. 4: EPLs (or equipment protection levels) are designated as G for gas or D for dust and are then followed by a letter (a, b, or c) to give the user a better understanding as to whether the equipment provides either (a) a “very high,” (b) a “high,” or (c) an “enhanced” level of protection against ignition of an explosive atmosphere. For example, a Zone 1, AEx db IIC T4 Gb motor (which is suitable by protection concept for application in Zone 1) is marked with an EPL of “Gb” to indicate that it was provided with a high level of protection.

Informational Note No. 5: Equipment installed outside a Zone 0 location, electrically connected to equipment located inside a Zone 0 location, may be marked Zone 0/1. The “/” indicates that equipment contains a separation element and can be installed at the boundary between a Zone 0 and a Zone 1 location. See ANSI/UL-60079-26-2017, *Explosive Atmospheres — Part 26: Equipment with Equipment Protection Level (EPL) Ga*.

Figure Informational Note Figure 505.9(C)(2), No. 1 Zone Equipment Marking.

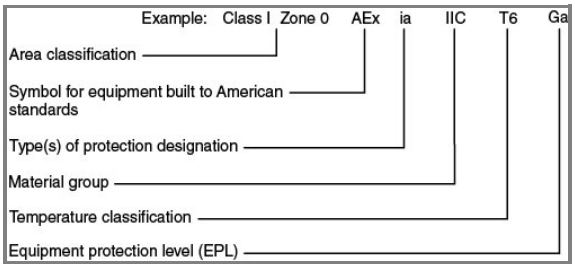

Table 505.9(C)(2)(4) Equipment Suitability

Type of Protection	Marking	Permitted Location
Associated apparatus for Zone 0	[ia]	Unclassified [1]
Associated apparatus for Zone 1	[ib]	Unclassified [1]
Associated apparatus for Zone 2	[ic]	Unclassified [1]
Associated pressurization equipment	[p]	Unclassified [1]
Intrinsic safety	ia; Class I, Division 1 Intrinsic Safety	Zone 0
Encapsulation	ma	
Optical radiation, inherently safe	op is, with EPL Ga [2]	
Optical radiation, with interlock	op sh, with EPL Ga [2]	
Special protection	sa	
EPL Ga, with suitable type of protection [3]		
Equipment Suitable for Use in Zone 0		
Equipment Suitable for Use in Class I, Division 1		
Flameproof enclosure	d; db	Zone 1
Intrinsic safety	ib	
Increased safety	e; eb	
Pressurized enclosure	p; px, pxb; py; pyb	
Encapsulation	m; mb	
Powder filling	q; qb	
Liquid immersion	o; ob	
Electrical resistance trace heating	60079-30-1, with EPL Gb [2]	
Skin effect trace heating	IEEE 844.1, with EPL Gb [2]	
Optical radiation, inherently safe	op is, with EPL Gb [2]	
Optical radiation, with interlock	op sh, with EPL Gb [2]	
Optical radiation, protected	op pr, with EPL Gb [2]	
Special protection	sb	
EPL Gb, with suitable type of protection [3]		
Equipment Suitable for Use in Zone 1		
Equipment Suitable for Use in Class I, Division 2		
Type of protection “n”	nA; nC; nR	Zone 2
Pressurized enclosure	pz, pzc	
Intrinsic safety	ic	
Flameproof enclosure	dc	
Increased safety	ec	
Liquid immersion	oc	
Encapsulation	mc	
Electrical resistance trace heating	60079-30-1, *with EPL Gc* [2]	

Skin effect trace heating	IEEE 844.1, with EPL Gc [2]
Optical radiation, inherently safe	op is, *with EPL Gc* [2]
Optical radiation, with interlock	op sh, *with EPL Gc* [2]
Optical radiation, protected	op pr, *with EPL Gc* [2]
Special protection	sc
EPL Gc, with suitable type of protection [3]	
Other electrical equipment — general purpose motors [4]	

[1]Permitted to be installed in a hazardous (classified) location if suitably protected using another type of protection.

[2]Equipment marked with these types of protection is available in multiple levels of protection that are not specifically identified within the AEx marking.

[3]The EPL takes precedence over the types of protection. For example, “ia Gb” is suitable for Zone 1 (not Zone 0). “60079-30-1 Gc” is suitable for Zone 2 (not Zone 1). Selection according to the marked EPL is critical to the safe application of this equipment.

[4]“Other electrical equipment — general purpose motors” refers to motors in accordance with Exception No. 4 to 505.20(C).

Statement of Problem and Substantiation for Public Input

Under the NEC Division system, there is permission for Other Protection Techniques as described in 500.7(L). This permits the ability for new and innovative designs to be certified for Division 1 or 2 applications that are outside the Scope of other Division system Protection Techniques (e.g. Explosionproof, Intrinsic Safety, and Dust Ignitionproof).

While there is no such permission under the NEC Zone system, there is such permission under the IEC Zone system based on IEC 60079-33, Explosive atmospheres – Part 33: Equipment protection by special protection “s”. The U.S. is in the process of adopting IEC 60079-33 as ANSI/UL 60079-33 with National differences. This adoption is expected to be in place prior to the Second Draft Public Comment Closing Date.

The anticipated ANSI/UL 60079-33 (as with the existing IEC 60079-33) is only intended for equipment that is outside the Scope of other ANSI/UL 60079 series protection technique standards.

Also see PI Nos. 726, 727, 729 and 730.

Related Public Inputs for This Document

Related Input	Relationship
Public Input No. 726-NFPA 70-2020 [New Definition after Definition: Spray Room.]	
Public Input No. 727-NFPA 70-2020 [New Section after 505.8(N)]	
Public Input No. 729-NFPA 70-2020 [New Section after 506.8(N)]	
Public Input No. 730-NFPA 70-2020 [Section No. 506.9(C)(2)]	
Public Input No. 726-NFPA 70-2020 [New Definition after Definition: Spray Room.]	
Public Input No. 727-NFPA 70-2020 [New Section after 505.8(N)]	
Public Input No. 729-NFPA 70-2020 [New Section after 506.8(N)]	
Public Input No. 730-NFPA 70-2020 [Section No. 506.9(C)(2)]	

Submitter Information Verification

Submitter Full Name: Paul Kelly
Organization: UL LLC
Street Address:
City:
State:
Zip:
Submittal Date: Fri Mar 20 17:15:28 EDT 2020
Committee: NEC-P14

Committee Statement

Resolution: FR-8648-NFPA 70-2021

Statement: This action adds new Table 13 covering protection techniques for hazardous (classified) locations to Chapter 9. The new table to replaces existing tables in Article 505 and 506 with one comprehensive Table addressing all of the Protection Techniques or Types of Protection for Hazardous Locations. This action also incorporates the recommendations of PIs 2220, 2263, 722 and 728.

Public Input No. 1978-NFPA 70-2020 [Section No. 505.9(E)(3)]

(3) Unused Openings.

All unused openings shall be closed with close-up plugs listed for the location and which shall maintain the type of protection. The close-up plug engagement shall comply with 505.9(E)(1) or 505.9(E)(2).

Exception: Equipment that is listed and supplied with close-up plugs as part of their listing shall be permitted to be used.

Statement of Problem and Substantiation for Public Input

Listed equipment may employ close-up plugs that are not independently listed for either the location or the type of protection when evaluated as part of the equipment listing.

Submitter Information Verification

Submitter Full Name: Megan Hayes
Organization: Nema
Street Address:
City:
State:
Zip:
Submittal Date: Wed Jul 22 15:19:34 EDT 2020
Committee: NEC-P14

Committee Statement

Resolution: FR-8645-NFPA 70-2021
Statement: The recommendation has been revised to make “close-up plug” the term “blanking element”. See the UL 60079-0 or UL 1203 for the definition of blanking element.

Public Input No. 1583-NFPA 70-2020 [Section No. 505.9(F)]

(F) Optical Fiber Cables.

An optical fiber cable, with or without current-carrying ~~current~~ conductors (composite optical fiber cable), shall be installed to address the associated fire hazard and sealed to address the associated explosion hazard in accordance with the requirements of 505.15 and 505.16.

Statement of Problem and Substantiation for Public Input

"current" should be replaced with "conductors" because it was a misprint (see previous addition for intended wording)

Submitter Information Verification

Submitter Full Name: James Hoover
Organization: Hoover Technology Solutions
Street Address:
City:
State:
Zip:
Submittal Date: Sat Jun 20 00:17:53 EDT 2020
Committee: NEC-P14

Committee Statement

Resolution: FR-8579-NFPA 70-2021
Statement: The revision corrects an error in the sentence and removes redundant language.

Public Input No. 4079-NFPA 70-2020 [Section No. 505.9(F)]

(F) Optical Fiber Cables.

An optical fiber cable, with or without current-carrying current (composite optical fiber cable), shall be installed to address the associated fire hazard and sealed to address the associated explosion hazard in accordance ~~with the requirements of~~ with 505.15 and 505.16.

Statement of Problem and Substantiation for Public Input

Deleting the words "the requirements of" does not change the meaning of the section.

Submitter Information Verification

Submitter Full Name: David Williams
Organization: Delta Charter Township
Street Address:
City:
State:
Zip:
Submittal Date: Wed Sep 09 20:18:17 EDT 2020
Committee: NEC-P14

Committee Statement

Resolution: FR-8579-NFPA 70-2021
Statement: The revision corrects an error in the sentence and removes redundant language.

Public Input No. 421-NFPA 70-2020 [Section No. 505.9(F)]

(F) Optical Fiber Cables.

An optical fiber cable, with or without current-carrying current (~~composite~~ hybrid optical fiber cable), shall be installed to address the associated fire hazard and sealed to address the associated explosion hazard in accordance with the requirements of 505.15 and 505.16.

Statement of Problem and Substantiation for Public Input

Public Input No. 416 proposes to change “composite optical fiber cable” to “hybrid optical fiber cable” in order to align the NEC with current U.S and international definitions. Acceptance of PI 416 necessitates changing “composite optical fiber cable” to “hybrid optical fiber cable” throughout the NEC. This is a coordinating Public Input to PI 416.

Related Public Inputs for This Document

Related Input	Relationship
Public Input No. 416-NFPA 70-2020 [Definition: Cable, Optical Fiber, Composite.]	Changes definition of composite optical fiber cable to hybrid optical fiber cable
Public Input No. 417-NFPA 70-2020 [Section No. 770.3(C)]	Coordinates with the change of composite optical fiber cable to hybrid optical fiber cable in PI 416
Public Input No. 418-NFPA 70-2020 [Section No. 770.133(B)]	Coordinates with the change of composite optical fiber cable to hybrid optical fiber cable in PI 416
Public Input No. 419-NFPA 70-2020 [Section No. 830.1]	Coordinates with the change of composite optical fiber cable to hybrid optical fiber cable in PI 416
Public Input No. 420-NFPA 70-2020 [Section No. 500.8(F)]	Coordinates with the change of composite optical fiber cable to hybrid optical fiber cable in PI 416
Public Input No. 422-NFPA 70-2020 [Section No. 506.9(F)]	Coordinates with the change of composite optical fiber cable to hybrid optical fiber cable in PI 416
Public Input No. 423-NFPA 70-2020 [Section No. 640.21(B)]	Coordinates with the change of composite optical fiber cable to hybrid optical fiber cable in PI 416
Public Input No. 424-NFPA 70-2020 [Section No. 640.21(C)]	Coordinates with the change of composite optical fiber cable to hybrid optical fiber cable in PI 416
Public Input No. 425-NFPA 70-2020 [Section No. 640.42(B)]	Coordinates with the change of composite optical fiber cable to hybrid optical fiber cable in PI 416
Public Input No. 426-NFPA 70-2020 [Section No. 640.42(C)]	Coordinates with the change of composite optical fiber cable to hybrid optical fiber cable in PI 416
Public Input No. 416-NFPA 70-2020 [Definition: Cable, Optical Fiber, Composite.]	
Public Input No. 417-NFPA 70-2020 [Section No. 770.3(C)]	
Public Input No. 418-NFPA 70-2020 [Section No. 770.133(B)]	
Public Input No. 419-NFPA 70-2020 [Section No. 830.1]	

Public Input No. 420-NFPA 70-2020 [Section No. 500.8(F)]

Public Input No. 422-NFPA 70-2020 [Section No. 506.9(F)]

Public Input No. 423-NFPA 70-2020 [Section No. 640.21(B)]

Public Input No. 424-NFPA 70-2020 [Section No. 640.21(C)]

Public Input No. 425-NFPA 70-2020 [Section No. 640.42(B)]

Public Input No. 426-NFPA 70-2020 [Section No. 640.42(C)]

Submitter Information Verification

Submitter Full Name: Stanley Kaufman
Organization: CableSafe, Inc./OFS
Affiliation: Insulated Cable Engineers Association (ICEA)
Street Address:
City:
State:
Zip:
Submittal Date: Tue Feb 04 13:04:32 EST 2020
Committee: NEC-P14

Committee Statement

Resolution: Acceptance of this terminology by CMP-16 is necessary for CMP-14 to integrate this change.

Public Input No. 4466-NFPA 70-2020 [Section No. 505.15(A)]

(A) Zone 0.

In Zone 0 locations, equipment protected by intrinsic safety “ia” and equipment protected by encapsulation “ma” shall be connected using intrinsically safe “ia” circuits with wiring methods in accordance with ~~Article~~ 504. 20 .

Statement of Problem and Substantiation for Public Input

Section 4.1.4 of the 2020 NEC(r) Style Manual prohibits references to an entire article, with the exception of Article 100. Wiring methods are detailed in Section 504.20 so referring to that specific section accomplishes the same thing while complying with the Style Manual.

Submitter Information Verification

Submitter Full Name: Richard Holub
Organization: The DuPont Company, Inc.
Street Address:
City:
State:
Zip:
Submittal Date: Thu Sep 10 13:34:04 EDT 2020
Committee: NEC-P14

Committee Statement

Resolution: FR-8541-NFPA 70-2021

Statement: The NEC Style Manual, in Section 4.1.4 prohibits references to entire articles of the NEC. The reference is changed to 504.20 which details wiring methods and complying with the requirement.

Public Input No. 2444-NFPA 70-2020 [Section No. 505.15(B)(1)]

(1) General.

In Zone 1 locations, the following wiring methods shall be permitted:

(1) All wiring methods permitted by 505.15(A).

(2) In industrial establishments with restricted public access, where the conditions of maintenance and supervision ensure that only qualified persons service the installation, and where the cable is not subject to physical damage, Type MC-HL cable listed for use in Zone 1 or Class I, Division 1 locations, with a gas/vaportight continuous corrugated metallic sheath, an overall jacket of suitable polymeric material, and a separate equipment grounding conductor(s) in accordance with 250.122, and terminated with fittings listed for the application. Type MC-HL cable shall be installed in accordance with Part II of Article 330.

(3) In industrial establishments with restricted public access, where the conditions of maintenance and supervision ensure that only qualified persons service the installation, and where the cable is not subject to physical damage, Type ITC-HL cable listed for use in Zone 1 or Class I, Division 1 locations, with a gas/vaportight continuous corrugated metallic sheath and an overall jacket of suitable polymeric material, and terminated with fittings listed for the application. Type ITC-HL cable shall be installed in accordance with ~~727.4~~ . ~~Informational Note: See Article 727, including the restrictions of 727.4 and 727.5 for restrictions on use of Type ITC cable~~ .

(4) Type MI cable terminated with fittings listed for Zone 1 or Class I, Division 1 locations. Type MI cable shall be installed and supported in a manner to avoid tensile stress at the termination fittings.

(5) Threaded rigid metal conduit (Type RMC) or threaded steel intermediate metal conduit (Type IMC).

(6) Type PVC or RTRC conduit shall be permitted where encased in a concrete envelope a minimum of 50 mm (2 in.) thick and provided with not less than 600 mm (24 in.) of cover measured from the top of the conduit to grade. Threaded rigid metal conduit or threaded steel intermediate metal conduit shall be used for the last 600 mm (24 in.) of the underground run to emergence or to the point of connection to the aboveground raceway. An equipment grounding conductor shall be included to provide for electrical continuity of the raceway system and for grounding of non–current-carrying metal parts.

(7) Intrinsic safety type of protection “ib” shall be permitted using the wiring methods in accordance with 504.20.

(8) Optical fiber cable Types OFNP, OFCP, OFNR, OFCR, OFNG, OFCG, OFN, and OFC shall be permitted to be installed in raceways in accordance with 505.15(B). Optical fiber cable shall be sealed in accordance with 505.16.

(9) In industrial establishments with restricted public access, where the conditions of maintenance and supervision ensure that only qualified persons service the installation, for applications limited to 600 volts nominal or less, and where the cable is not subject to physical damage and terminated with fittings listed for the location, Type TC-ER-HL cable shall be listed for use in Class I, Division 1 or Zone 1 locations and shall be installed in accordance with 336.10.

Informational Note: See the information on construction, testing, and marking of cables and cable fittings in ANSI/UL 2225-2013, *Cables and Cable-Fittings for Use in Hazardous (Classified) Locations*.

(10) In industrial establishments with restricted public access, where the conditions of maintenance and supervision ensure that only qualified persons service the installation, listed Type P cable with metal braid armor, with an overall jacket, and terminated with fittings listed for the location, and installed in accordance with 337.10.

Informational Note No. 1: For information on construction, testing, and marking of Type P cable, see ANSI/UL 1309-2017, M*arine Shipboard Cable*.

Informational Note No. 2: For information on construction, testing, and marking of cable fittings, see ANSI/UL 2225-2013, *Cables and Cable-Fittings for Use in Hazardous (Classified) Locations*.

Statement of Problem and Substantiation for Public Input

The PI moves an informational note that appears to provide a recommendation or a requirement to the code language of the requirement it is attached to and adds conformity with the text found in 505.15(B)(1)(i).

Submitter Information Verification

Submitter Full Name: John Simmons
Organization: Florida East Coast JATC
Street Address:
City:
State:
Zip:
Submittal Date: Sat Aug 22 14:23:17 EDT 2020
Committee: NEC-P14

Committee Statement

Resolution: FR-8414-NFPA 70-2021
Statement: The informational note to (3) has been converted to positive text.

The PI recommendation correctly updates the standard for Type P cable. The format of the sentence was revised to comply with 3.1.3.1 of the NEC Style Manual. The title of the standard is revised to match the title of 1309A shown on the UL standards webpage. Informational Note No. 2 was also revised to comply with Section 3.1.3.1 of the NEC Style Manual. The informational note to (9) has been revised for compliance with the NEC Style Manual.

Public Input No. 2505-NFPA 70-2020 [Section No. 505.15(B)(1)]

(1) General.

In Zone 1 locations, the following wiring methods shall be permitted:

(1) All wiring methods permitted by 505.15(A).

(2) In industrial establishments ~~with restricted public access~~ , ~~where the conditions of maintenance~~ and ~~supervision ensure that only qualified persons service the installation, and~~ where the cable is not subject to physical damage, Type MC-HL cable listed for use in Zone 1 or Class I, Division 1 locations, with a gas/vaportight continuous corrugated metallic sheath, an overall jacket of suitable polymeric material, and a separate equipment grounding conductor(s) in accordance with 250.122, and terminated with fittings listed for the application. Type MC-HL cable shall be installed in accordance with Part II of Article 330.

(3) In industrial establishments ~~with restricted public access, where the conditions of maintenance~~ and ~~supervision ensure that only qualified persons service the installation, and~~ where the cable is not subject to physical damage, Type ITC-HL cable listed for use in Zone 1 or Class I, Division 1 locations, with a gas/vaportight continuous corrugated metallic sheath and an overall jacket of suitable polymeric material, and terminated with fittings listed for the application. Type ITC-HL cable shall be installed in accordance with 727.4.

Informational Note: See 727.4 and 727.5 for restrictions on use of Type ITC cable.

(4) Type MI cable terminated with fittings listed for Zone 1 or Class I, Division 1 locations. Type MI cable shall be installed and supported in a manner to avoid tensile stress at the termination fittings.

(5) Threaded rigid metal conduit (Type RMC) or threaded steel intermediate metal conduit (Type IMC).

(6) Type PVC or RTRC conduit shall be permitted where encased in a concrete envelope a minimum of 50 mm (2 in.) thick and provided with not less than 600 mm (24 in.) of cover measured from the top of the conduit to grade. Threaded rigid metal conduit or threaded steel intermediate metal conduit shall be used for the last 600 mm (24 in.) of the underground run to emergence or to the point of connection to the aboveground raceway. An equipment grounding conductor shall be included to provide for electrical continuity of the raceway system and for grounding of non–current-carrying metal parts.

(7) Intrinsic safety type of protection “ib” shall be permitted using the wiring methods in accordance with 504.20.

(8) Optical fiber cable Types OFNP, OFCP, OFNR, OFCR, OFNG, OFCG, OFN, and OFC shall be permitted to be installed in raceways in accordance with 505.15(B). Optical fiber cable shall be sealed in accordance with 505.16.

(9) In industrial establishments ~~with restricted public access, where the conditions of maintenance and supervision ensure that only qualified persons service the installation,~~ for applications limited to 600 volts nominal or less, and where the cable is not subject to physical damage and terminated with fittings listed for the location, Type TC-ER-HL cable shall be listed for use in Class I, Division 1 or Zone 1 locations and shall be installed in accordance with 336.10.

Informational Note: See the information on construction, testing, and marking of cables and cable fittings in ANSI/UL 2225-2013, *Cables and Cable-Fittings for Use in Hazardous (Classified) Locations*.

(10) ~~In industrial establishments with restricted public access~~ , ~~where the conditions of maintenance and supervision ensure that only qualified persons service the installation,~~ listed Type P cable with metal braid armor, with an overall jacket, and terminated with fittings listed for the location, and installed in accordance with 337.10.

Informational Note No. 1: For information on construction, testing, and marking of Type P cable, see ANSI/UL 1309-2017, M*arine Shipboard Cable*.

Informational Note No. 2: For information on construction, testing, and marking of cable fittings, see ANSI/UL 2225-2013, *Cables and Cable-Fittings for Use in Hazardous (Classified) Locations*.

Statement of Problem and Substantiation for Public Input

The term industrial establishment is used throughout Articles 500 through 506. Where the term is used the following text is added: "restricted access where the conditions of maintenance and engineering supervision ensure that only qualified persons install and service the installation. By creating a definition, the added text can be removed from each location where the term appears. This will remove clutter from the section or subdivision where the term appears which will improve readability.

The proposed definition adds the requirement for the AHJ to approve the building for industrial use. This will help to add some consistency to the use of the less restrictive requirements for industrial establishments.

Related Public Inputs for This Document

Related Input	Relationship
Public Input No. 2494-NFPA 70-2020 [New Definition after Definition: Inherently Safe Optical Ra...]	

Submitter Information Verification

Submitter Full Name: John Simmons
Organization: Florida East Coast JATC
Street Address:
City:
State:
Zip:
Submittal Date: Sun Aug 23 16:51:33 EDT 2020
Committee: NEC-P14

Committee Statement

Resolution: The recommendation is predicated on the inclusion of a new definition of Industrial Establishments in Article 100. This requires action by CMP-1 during the First Draft phase of the revision process. If accepted, comments will be submitted for action during the Second Draft phase of the revision process.

Public Input No. 2550-NFPA 70-2020 [Section No. 505.15(B)(1)]

(1) General.

In Zone 1 locations, the following wiring methods shall be permitted:

(1) All wiring methods permitted by 505.15(A).

(2) In industrial establishments with restricted public access, where the conditions of maintenance and supervision ensure that only qualified persons service the installation, and where the cable is not subject to physical damage, Type MC-HL cable listed for use in Zone 1 or Class I, Division 1 locations, with a gas/vaportight continuous corrugated metallic sheath, an overall jacket of suitable polymeric material, and a separate equipment grounding conductor(s) in accordance with 250.122, and terminated with fittings listed for the application. Type MC-HL cable shall be installed in accordance with Part II of Article 330.

(3) In industrial establishments with restricted public access, where the conditions of maintenance and supervision ensure that only qualified persons service the installation, and where the cable is not subject to physical damage, Type ITC-HL cable listed for use in Zone 1 or Class I, Division 1 locations, with a gas/vaportight continuous corrugated metallic sheath and an overall jacket of suitable polymeric material, and terminated with fittings listed for the application. Type ITC-HL cable shall be installed in accordance with 727.4.

Informational Note: See 727.4 and 727.5 for restrictions on use of Type ITC cable.

(4) Type MI cable terminated with fittings listed for Zone 1 or Class I, Division 1 locations. Type MI cable shall be installed and supported in a manner to avoid tensile stress at the termination fittings.

(5) Threaded rigid metal conduit (Type RMC) or threaded steel intermediate metal conduit (Type IMC).

(6) Type PVC or RTRC conduit shall be permitted where encased in a concrete envelope a minimum of 50 mm (2 in.) thick and provided with not less than 600 mm (24 in.) of cover measured from the top of the conduit to grade. Threaded rigid metal conduit or threaded steel intermediate metal conduit shall be used for the last 600 mm (24 in.) of the underground run to emergence or to the point of connection to the aboveground raceway. An equipment grounding conductor shall be included to provide for electrical continuity of the raceway system and for grounding of non–current-carrying metal parts.

(7) Intrinsic safety type of protection “ib” shall be permitted using the wiring methods in accordance with 504.20.

(8) Optical fiber cable Types OFNP, OFCP, OFNR, OFCR, OFNG, OFCG, OFN, and OFC shall be permitted to be installed in raceways in accordance with 505.15(B). Optical fiber cable shall be sealed in accordance with 505.16.

(9) In industrial establishments with restricted public access, where the conditions of maintenance and supervision ensure that only qualified persons service the installation, for applications limited to 600 volts nominal or less, and where the cable is not subject to physical damage and terminated with fittings listed for the location, Type TC-ER-HL cable shall be listed for use in Class I, Division 1 or Zone 1 locations and shall be installed in accordance with 336.10.

Informational Note: See the information on construction, testing, and marking of cables and cable fittings in ANSI/UL 2225-2013, *Cables and Cable-Fittings for Use in Hazardous (Classified) Locations*.

(10) In industrial establishments with restricted public access, where the conditions of maintenance and supervision ensure that only qualified persons service the installation, listed Type P cable with metal braid armor, with an overall jacket, and terminated with fittings listed for the location, and installed in accordance with 337.10.

Informational Note No. 1: For information on construction, testing, and marking of Type P cable, see ~~ANSI/~~ UL ~~1309-2017, M *arine Shipboard Cable*~~ 1309A, *Cable for use in Mobile Installations* .

Informational Note No. 2: For information on construction, testing, and marking of cable fittings, see ANSI/UL 2225-2013, *Cables and Cable-Fittings for Use in Hazardous (Classified) Locations*.

Statement of Problem and Substantiation for Public Input

The requirements for Type P cables are now contained in UL 1309A, Cable for use in Mobile Installations. The following informational notes in the code that reference UL1309 have been updated to the correct UL1309A standard containing these requirements.

Related Public Inputs for This Document

Related Input	Relationship
Public Input No. 2544-NFPA 70-2020 [Section No. 501.10(A)(1)]	Companion
Public Input No. 2545-NFPA 70-2020 [Section No. 501.10(A)(2)]	Companion
Public Input No. 2546-NFPA 70-2020 [Section No. 501.10(B)(1)]	Companion
Public Input No. 2547-NFPA 70-2020 [Section No. 502.10(A)(2)]	Companion
Public Input No. 2548-NFPA 70-2020 [Section No. 502.10(A)(2)]	Companion
Public Input No. 2549-NFPA 70-2020 [Section No. 502.10(B)(1)]	Companion
Public Input No. 2551-NFPA 70-2020 [Section No. 505.15(B)(2)]	Companion
Public Input No. 2552-NFPA 70-2020 [Section No. 505.15(C)(1)]	Companion
Public Input No. 2544-NFPA 70-2020 [Section No. 501.10(A)(1)]	
Public Input No. 2545-NFPA 70-2020 [Section No. 501.10(A)(2)]	
Public Input No. 2546-NFPA 70-2020 [Section No. 501.10(B)(1)]	
Public Input No. 2547-NFPA 70-2020 [Section No. 502.10(A)(2)]	
Public Input No. 2548-NFPA 70-2020 [Section No. 502.10(A)(2)]	
Public Input No. 2549-NFPA 70-2020 [Section No. 502.10(B)(1)]	
Public Input No. 2551-NFPA 70-2020 [Section No. 505.15(B)(2)]	
Public Input No. 2552-NFPA 70-2020 [Section No. 505.15(C)(1)]	

Submitter Information Verification

Submitter Full Name: Paul Knapp
Organization: UL LLC
Street Address:
City:
State:
Zip:
Submittal Date: Mon Aug 24 14:13:27 EDT 2020
Committee: NEC-P14

Committee Statement

Resolution: FR-8414-NFPA 70-2021
Statement: The informational note to (3) has been converted to positive text.

The PI recommendation correctly updates the standard for Type P cable. The format of the sentence was revised to comply with 3.1.3.1 of the NEC Style Manual. The title of the standard is revised to match the title of 1309A shown on the UL standards webpage. Informational Note No. 2 was also revised to comply with Section 3.1.3.1 of the NEC Style Manual. The informational note to (9) has been revised for compliance with the NEC Style Manual.

Public Input No. 2506-NFPA 70-2020 [Section No. 505.15(B)(2)]

(2) Flexible Connections.

Where necessary to employ flexible connections, as at motor terminals, one of the following shall be permitted:

(1) Flexible fittings listed for the location.

(2) Flexible cord in accordance with 505.17(A), terminated with cord connectors listed for the location.

(3) In industrial establishments ~~with restricted public access, where the conditions of maintenance and supervision ensure that only qualified persons service the installation,~~ for applications limited to 600 volts nominal or less, and where the cable is not subject to physical damage, and terminated with fittings listed for the location, Type TC-ER-HL cable. Type TC-ER-HL cable shall be listed for use in Class I, Division 1 or Zone 1 locations and shall be installed in accordance with 336.10.

Informational Note: See the information on construction, testing, and marking of cables and cable fittings in ANSI/UL 2225-2013, *Cables and Cable-Fittings for Use in Hazardous (Classified) Locations*.

(4) In industrial establishments ~~with restricted public access, where the conditions of maintenance and supervision ensure that only qualified persons service the installation,~~ listed Type P cable with metal braid armor, with an overall jacket, and terminated with fittings listed for the location, and installed in accordance with 337.10.

Informational Note No. 1: For information on construction, testing, and marking of Type P cable, see ANSI/UL 1309-2017, *Marine Shipboard Cable*.

Informational Note No. 2: For information on construction, testing, and marking of cable fittings, see ANSI/UL 2225-2013, *Cables and Cable-Fittings for Use in Hazardous (Classified) Locations*.

Statement of Problem and Substantiation for Public Input

The term industrial establishment is used throughout Articles 500 through 506. Where the term is used the following text is added: "restricted access where the conditions of maintenance and engineering supervision ensure that only qualified persons install and service the installation. By creating a definition, the added text can be removed from each location where the term appears. This will remove clutter from the section or subdivision where the term appears which will improve readability.

The proposed definition adds the requirement for the AHJ to approve the building for industrial use. This will help to add some consistency to the use of the less restrictive requirements for industrial establishments.

Related Public Inputs for This Document

Related Input	Relationship
Public Input No. 2494-NFPA 70-2020 [New Definition after Definition: Inherently Safe Optical Ra...]	

Submitter Information Verification

Submitter Full Name: John Simmons
Organization: Florida East Coast JATC
Street Address:
City:
State:
Zip:
Submittal Date: Sun Aug 23 16:54:15 EDT 2020
Committee: NEC-P14

Committee Statement

Resolution: The recommendation is predicated on the inclusion of a new definition of Industrial Establishments in Article 100. This requires action by CMP-1 during the First Draft phase of the revision process. If accepted, comments will be submitted for action during the Second Draft phase of the revision process.

Public Input No. 2551-NFPA 70-2020 [Section No. 505.15(B)(2)]

(2) Flexible Connections.

Where necessary to employ flexible connections, as at motor terminals, one of the following shall be permitted:

(1) Flexible fittings listed for the location.

(2) Flexible cord in accordance with 505.17(A), terminated with cord connectors listed for the location.

(3) In industrial establishments with restricted public access, where the conditions of maintenance and supervision ensure that only qualified persons service the installation, for applications limited to 600 volts nominal or less, and where the cable is not subject to physical damage, and terminated with fittings listed for the location, Type TC-ER-HL cable. Type TC-ER-HL cable shall be listed for use in Class I, Division 1 or Zone 1 locations and shall be installed in accordance with 336.10.

Informational Note: See the information on construction, testing, and marking of cables and cable fittings in ANSI/UL 2225-2013, *Cables and Cable-Fittings for Use in Hazardous (Classified) Locations*.

(4) In industrial establishments with restricted public access, where the conditions of maintenance and supervision ensure that only qualified persons service the installation, listed Type P cable with metal braid armor, with an overall jacket, and terminated with fittings listed for the location, and installed in accordance with 337.10.

Informational Note No. 1: For information on construction, testing, and marking of Type P cable, see ~~ANSI/~~ UL ~~1309-2017~~ 1309A , ~~*Marine Shipboard*~~ *Cable for use in Mobile Installations* .

Informational Note No. 2: For information on construction, testing, and marking of cable fittings, see ANSI/UL 2225-2013, *Cables and Cable-Fittings for Use in Hazardous (Classified) Locations*.

Statement of Problem and Substantiation for Public Input

The requirements for Type P cables are now contained in UL 1309A, Cable for use in Mobile Installations. The following informational notes in the code that reference UL1309 have been updated to the correct UL1309A standard containing these requirements.

Related Public Inputs for This Document

Related Input	Relationship
Public Input No. 2544-NFPA 70-2020 [Section No. 501.10(A)(1)]	Companion
Public Input No. 2545-NFPA 70-2020 [Section No. 501.10(A)(2)]	Companion
Public Input No. 2546-NFPA 70-2020 [Section No. 501.10(B)(1)]	Companion
Public Input No. 2547-NFPA 70-2020 [Section No. 502.10(A)(2)]	Companion
Public Input No. 2548-NFPA 70-2020 [Section No. 502.10(A)(2)]	Companion
Public Input No. 2549-NFPA 70-2020 [Section No. 502.10(B)(1)]	Companion
Public Input No. 2550-NFPA 70-2020 [Section No. 505.15(B)(1)]	Companion
Public Input No. 2552-NFPA 70-2020 [Section No. 505.15(C)(1)]	Companion
Public Input No. 2544-NFPA 70-2020 [Section No. 501.10(A)(1)]	

Public Input No. 2545-NFPA 70-2020 [Section No. 501.10(A)(2)]
Public Input No. 2546-NFPA 70-2020 [Section No. 501.10(B)(1)]
Public Input No. 2547-NFPA 70-2020 [Section No. 502.10(A)(2)]
Public Input No. 2548-NFPA 70-2020 [Section No. 502.10(A)(2)]
Public Input No. 2549-NFPA 70-2020 [Section No. 502.10(B)(1)]
Public Input No. 2550-NFPA 70-2020 [Section No. 505.15(B)(1)]
Public Input No. 2552-NFPA 70-2020 [Section No. 505.15(C)(1)]

Submitter Information Verification

Submitter Full Name: Paul Knapp
Organization: UL LLC
Street Address:
City:
State:
Zip:
Submittal Date: Mon Aug 24 14:16:02 EDT 2020
Committee: NEC-P14

Committee Statement

Resolution: FR-8544-NFPA 70-2021

Statement: The PI correctly updates the standard for Type P cable. The format of the sentence was revised to comply with Section 3.1.3.1 of the NEC Style Manual. The title of the standard is revised to match the title of 1309A shown on the UL standards webpage. Informational Notes to (3) and (4) are reworded to meet the requirements of NEC® Style Manual 3.1.3.1. This is simply an editorial change and not intended to change the intent of the informational notes.

Public Input No. 2507-NFPA 70-2020 [Section No. 505.15(C)(1)]

(1) General.

In Zone 2 locations, the following wiring methods shall be permitted:

(1) All wiring methods permitted by 505.15(B).

(2) Type MC, MV, TC, or TC-ER cable, including installation in cable tray systems. Type TC-ER shall include a separate equipment grounding conductor in addition to a drain wire that might be present. The cable shall be terminated with listed fittings. Single conductor Type MV cables shall be shielded or metallic-armored.

(3) Types ITC and ITC-ER cable as permitted in 727.4 and terminated with listed fittings. Type ITC-ER shall include a separate insulated equipment grounding conductor in addition to a drain wire.

(4) Types PLTC and PLTC-ER cable in accordance with Part II or III of Article 725, including installation in cable tray systems. The cable shall be terminated with listed fittings. Type PLTC-ER shall include a separate insulated equipment grounding conductor in addition to a drain wire that might be present.

(5) Enclosed gasketed busways or enclosed gasketed wireways.

(6) In industrial establishments ~~with restricted public access, where the conditions of maintenance~~ and ~~supervision ensure that only qualified persons service the installation, and~~ where metallic conduit does not provide sufficient corrosion resistance, listed reinforced thermosetting resin conduit (Type RTRC), factory elbows, and associated fittings, all marked with the suffix -XW, and Schedule 80 PVC conduit, factory elbows, and associated fittings shall be permitted. Where seals are required for boundary conditions as defined in 505.16(C)(1)(b), the Zone 1 wiring method shall extend into the Zone 2 area to the seal, which shall be located on the Zone 2 side of the Zone 1/Zone 2 boundary.

(7) Intrinsic safety type of protection “ic” shall be permitted using any of the wiring methods permitted for unclassified locations. Intrinsic safety type of protection “ic” systems shall be installed in accordance with the control drawing(s). Simple apparatus, not shown on the control drawing, shall be permitted in an intrinsic safety type of protection “ic” circuit, provided that the simple apparatus does not interconnect the intrinsic safety type of protection “ic” systems to any other circuit. Separate intrinsic safety type of protection “ic” systems shall be installed in accordance with one of the following:

(8) In separate cables

(9) In multiconductor cables where the conductors of each circuit are within a grounded metal shield

(10) In multiconductor cables where the conductors of each circuit have insulation with a minimum thickness of 0.25 mm (0.01 in.)

Informational Note: Simple apparatus is defined in Article 100 Part III.

(11) Optical fiber cable of Types OFNP, OFCP, OFNR, OFCR, OFNG, OFCG, OFN, and OFC shall be permitted to be installed in cable trays or any other raceway in accordance with 505.15(C). Optical fiber cable shall be sealed in accordance with 505.16.

(12) Cablebus.

(13) In industrial establishments ~~with restricted public access, where the conditions of maintenance and supervision ensure that only qualified persons service the installation,~~ listed Type P cable with or without metal braid armor, with an overall jacket, and terminated with fittings listed for the location, and installed in accordance with 337.10.

Informational Note No. 1: For information on construction, testing, and marking of Type P cable, see ANSI/UL 1309-2017, *Marine Shipboard Cable*.

Informational Note No. 2: For information on construction, testing, and marking of cable fittings, see ANSI/UL 2225-2013, *Cables and Cable-Fittings for Use in Hazardous (Classified) Locations*.

Statement of Problem and Substantiation for Public Input

The term industrial establishment is used throughout Articles 500 through 506. Where the term is used the following text is added: "restricted access where the conditions of maintenance and engineering supervision ensure that only qualified persons install and service the installation. By creating a definition, the added text can be removed from each location where the term appears. This will remove clutter from the section or subdivision where the term appears which will improve readability.

The proposed definition adds the requirement for the AHJ to approve the building for industrial use. This will help to add some consistency to the use of the less restrictive requirements for industrial establishments.

Related Public Inputs for This Document

Related Input	Relationship
Public Input No. 2494-NFPA 70-2020 [New Definition after Definition: Inherently Safe Optical Ra...]	

Submitter Information Verification

Submitter Full Name: John Simmons
Organization: Florida East Coast JATC
Street Address:
City:
State:
Zip:
Submittal Date: Sun Aug 23 16:55:58 EDT 2020
Committee: NEC-P14

Committee Statement

Resolution: The recommendation is predicated on the inclusion of a new definition of Industrial Establishments in Article 100. This requires action by CMP-1 during the First Draft phase of the revision process. If accepted, comments will be submitted for action during the Second Draft phase of the revision process.

Public Input No. 2552-NFPA 70-2020 [Section No. 505.15(C)(1)]

(1) General.

In Zone 2 locations, the following wiring methods shall be permitted:

(1) All wiring methods permitted by 505.15(B).

(2) Type MC, MV, TC, or TC-ER cable, including installation in cable tray systems. Type TC-ER shall include a separate equipment grounding conductor in addition to a drain wire that might be present. The cable shall be terminated with listed fittings. Single conductor Type MV cables shall be shielded or metallic-armored.

(3) Types ITC and ITC-ER cable as permitted in 727.4 and terminated with listed fittings. Type ITC-ER shall include a separate insulated equipment grounding conductor in addition to a drain wire.

(4) Types PLTC and PLTC-ER cable in accordance with Part II or III of Article 725, including installation in cable tray systems. The cable shall be terminated with listed fittings. Type PLTC-ER shall include a separate insulated equipment grounding conductor in addition to a drain wire that might be present.

(5) Enclosed gasketed busways or enclosed gasketed wireways.

(6) In industrial establishments with restricted public access, where the conditions of maintenance and supervision ensure that only qualified persons service the installation, and where metallic conduit does not provide sufficient corrosion resistance, listed reinforced thermosetting resin conduit (Type RTRC), factory elbows, and associated fittings, all marked with the suffix -XW, and Schedule 80 PVC conduit, factory elbows, and associated fittings shall be permitted. Where seals are required for boundary conditions as defined in 505.16(C)(1)(b), the Zone 1 wiring method shall extend into the Zone 2 area to the seal, which shall be located on the Zone 2 side of the Zone 1/Zone 2 boundary.

(7) Intrinsic safety type of protection “ic” shall be permitted using any of the wiring methods permitted for unclassified locations. Intrinsic safety type of protection “ic” systems shall be installed in accordance with the control drawing(s). Simple apparatus, not shown on the control drawing, shall be permitted in an intrinsic safety type of protection “ic” circuit, provided that the simple apparatus does not interconnect the intrinsic safety type of protection “ic” systems to any other circuit. Separate intrinsic safety type of protection “ic” systems shall be installed in accordance with one of the following:

(8) In separate cables

(9) In multiconductor cables where the conductors of each circuit are within a grounded metal shield

(10) In multiconductor cables where the conductors of each circuit have insulation with a minimum thickness of 0.25 mm (0.01 in.)

Informational Note: Simple apparatus is defined in Article 100 Part III.

(11) Optical fiber cable of Types OFNP, OFCP, OFNR, OFCR, OFNG, OFCG, OFN, and OFC shall be permitted to be installed in cable trays or any other raceway in accordance with 505.15(C). Optical fiber cable shall be sealed in accordance with 505.16.

(12) Cablebus.

(13) In industrial establishments with restricted public access, where the conditions of maintenance and supervision ensure that only qualified persons service the installation, listed Type P cable with or without metal braid armor, with an overall jacket, and terminated with fittings listed for the location, and installed in accordance with 337.10.

Informational Note No. 1: For information on construction, testing, and marking of Type P cable, see ~~ANSI/~~ UL ~~1309-2017~~ 1309A , ~~*Marine Shipboard*~~ *Cable for use in Mobile Installations* .

Informational Note No. 2: For information on construction, testing, and marking of cable fittings, see ANSI/UL 2225-2013, *Cables and Cable-Fittings for Use in Hazardous (Classified) Locations*.

Statement of Problem and Substantiation for Public Input

The requirements for Type P cables are now contained in UL 1309A, Cable for use in Mobile Installations. The following informational notes in the code that reference UL1309 have been updated to the correct UL1309A standard containing these requirements.

Related Public Inputs for This Document

Related Input	Relationship
Public Input No. 2544-NFPA 70-2020 [Section No. 501.10(A)(1)]	Companion
Public Input No. 2545-NFPA 70-2020 [Section No. 501.10(A)(2)]	Companion
Public Input No. 2546-NFPA 70-2020 [Section No. 501.10(B)(1)]	Companion
Public Input No. 2547-NFPA 70-2020 [Section No. 502.10(A)(2)]	Companion
Public Input No. 2548-NFPA 70-2020 [Section No. 502.10(A)(2)]	Companion
Public Input No. 2549-NFPA 70-2020 [Section No. 502.10(B)(1)]	Companion
Public Input No. 2550-NFPA 70-2020 [Section No. 505.15(B)(1)]	Companion
Public Input No. 2551-NFPA 70-2020 [Section No. 505.15(B)(2)]	Companion
Public Input No. 2544-NFPA 70-2020 [Section No. 501.10(A)(1)]	
Public Input No. 2545-NFPA 70-2020 [Section No. 501.10(A)(2)]	
Public Input No. 2546-NFPA 70-2020 [Section No. 501.10(B)(1)]	
Public Input No. 2547-NFPA 70-2020 [Section No. 502.10(A)(2)]	
Public Input No. 2548-NFPA 70-2020 [Section No. 502.10(A)(2)]	
Public Input No. 2549-NFPA 70-2020 [Section No. 502.10(B)(1)]	
Public Input No. 2550-NFPA 70-2020 [Section No. 505.15(B)(1)]	
Public Input No. 2551-NFPA 70-2020 [Section No. 505.15(B)(2)]	

Submitter Information Verification

Submitter Full Name: Paul Knapp
Organization: UL LLC
Street Address:
City:
State:
Zip:
Submittal Date: Mon Aug 24 14:18:29 EDT 2020
Committee: NEC-P14

Committee Statement

Resolution: FR-8549-NFPA 70-2021

Statement: The PI correctly updates the standard for Type P cable. The format of the sentence was revised to comply with Section 3.1.3.1 of the NEC Style Manual. The title of the standard is revised to match the title of 1309A shown on the UL webpage.

Public Input No. 2449-NFPA 70-2020 [Section No. 505.15(C)(2)]

(2) Flexible Connections.

Where provision must be made for flexibility, one or more of the following wiring methods shall be permitted~~:~~ . If flexible conduit is used, it shall be grounded in accordance with 505.25(B).

(1) Listed flexible metal fittings.

(2) Flexible metal conduit with listed fittings.

(3) Interlocked armor Type MC cable with listed fittings.

(4) Type P cable.

(5) Type TC-ER or Type TC-ER-HL cable.

(6) Type ITC-ER or Type ITC-HL cable.

(7) Type PLTC-ER cable.

(8) Liquidtight flexible metal conduit with listed fittings.

(9) Liquidtight flexible nonmetallic conduit with listed fittings.

(10) Flexible cord in accordance with the provisions of 505.17 terminated with a listed cord connector that maintains the type of protection of the terminal compartment shall be permitted.

(11) For elevator use, an identified elevator cable of Type EO, ETP, or ETT, shown under the "use" column in Table 400.4 for "hazardous (classified) locations" and terminated with listed fittings.

~~Informational Note: See 505.25(B) for grounding requirements where flexible conduit is used.~~

Statement of Problem and Substantiation for Public Input

The informational note contains a recommendation and should be located in code text. The PI deletes the PI and adds the reference for grounding flexible conduit to the parent text of 505.15(C)(2).

Submitter Information Verification

Submitter Full Name: John Simmons
Organization: Florida East Coast JATC
Street Address:
City:
State:
Zip:
Submittal Date: Sat Aug 22 16:20:25 EDT 2020
Committee: NEC-P14

Committee Statement

Resolution: FR-8550-NFPA 70-2021

Statement: The informational note to 505.15(B)(2) is converted to positive code text for clarity, making it more effective and the reference has been updated from 505.25(B) to 505.30(B).

Public Input No. 2526-NFPA 70-2020 [Section No. 505.15(C)(2)]

(2) Flexible Connections.

Where provision must be made for flexibility, one or more of the following shall be permitted:

(1) Listed flexible metal fittings.

(2) Flexible metal conduit with listed fittings and bonded per 505 .25.

(3) Interlocked armor Type MC cable with listed fittings.

(4) Type P cable.

(5) Type TC-ER or Type TC-ER-HL cable.

(6) Type ITC-ER or Type ITC-HL cable.

(7) Type PLTC-ER cable.

(8) Liquidtight flexible metal conduit with listed fittings and bonded per 505 .25.

(9) Liquidtight flexible nonmetallic conduit with listed fittings.

(10) Flexible cord in accordance with the provisions of 505.17 terminated with a listed cord connector that maintains the type of protection of the terminal compartment shall be permitted.

(11) For elevator use, an identified elevator cable of Type EO, ETP, or ETT, shown under the "use" column in Table 400.4 for "hazardous (classified) locations" and terminated with listed fittings.

~~Informational Note: See 505.25(B) for grounding requirements where flexible conduit is used.~~

Statement of Problem and Substantiation for Public Input

The informational note refers the reader to 505.25(B) for grounding for flexible metal conduit is used. Informational notes are required to be placed directly under the rule they apply to. Additionally, 505.30(B) provides bonding requirements for liquidtight flexible metal conduit and not grounding requirements. The PI changes the note to positive code language and adds it to the correct flexible metal wiring methods.

Submitter Information Verification

Submitter Full Name: John Simmons
Organization: Florida East Coast JATC
Street Address:
City:
State:
Zip:
Submittal Date: Sun Aug 23 21:50:00 EDT 2020
Committee: NEC-P14

Committee Statement

Resolution: FR-8550-NFPA 70-2021

Statement: The informational note to 505.15(B)(2) is converted to positive code text for clarity, making it more effective and the reference has been updated from 505.25(B) to 505.30(B).

Public Input No. 2222-NFPA 70-2020 [Section No. 505.16(B)(3)]

(3) Pressurized Enclosures and Pressurized Rooms .

Conduit seals shall be provided in each conduit entry into a pressurized enclosure or pressurized room where the conduit is not pressurized as part of the protection system. Conduit seals shall be installed within 450 mm (18 in.) from the pressurized enclosure or pressurized room .

Informational Note No. 1: Installing the seal as close as possible to the enclosure reduces problems with purging the dead airspace in the pressurized conduit.

Informational Note No. 2: For further information, see NFPA 496-2017, *Standard for Purged and Pressurized Enclosures for Electrical Equipment*.

Informational Note No. 3: For further information, see UL 60079-13-2020, *EXPLOSIVE ATMOSPHERES - Part 13: Equipment Protection by Pressurized Room "p" and Artificially Ventilated Room "v".*

Statement of Problem and Substantiation for Public Input

A pressurized room is essentially a pressurized enclosure with provisions for human access, so the sealing requirements should be the same. The recommended text does not include an installation distance for seals entering ventilated rooms, as the requirement is in clause 4.5 of UL 66079-13, to wit: "The entry of cables, electrical conduits and other penetrations into the room shall be sealed so that the necessary pressure differential or artificial ventilation integrity is maintained." Note that this requirement only applies to ventilated rooms.

Related Public Inputs for This Document

Related Input	Relationship
Public Input No. 2217-NFPA 70-2020 [New Definition after Definition: Pressurized Enclosure “p”.]	Additional protection method covered by standard UL 60079-13

Submitter Information Verification

Submitter Full Name: William Fiske
Organization: Intertek Testing Services
Street Address:
City:
State:
Zip:
Submittal Date: Tue Aug 11 15:22:09 EDT 2020
Committee: NEC-P14

Committee Statement

Resolution: FR-8548-NFPA 70-2021

Statement: Pressurized rooms are addressed in ANSI/UL 60079-13-2020 while Purged and Pressurized equipment is addressed in NFPA 496-2017. The addition of pressurized rooms to 505.16(B)(3) makes it clear that these rooms must meet the requirements in the

subdivision. The requirements are needed to ensure the safety of these rooms but are often not used when installing the electric to them. Informational Note No. 2 is revised to comply with Section 4.1.3 of the NEC Style Manual.

Public Input No. 2139-NFPA 70-2020 [Section No. 505.16(C)(2)]

(2) Cable Seals.

Cable seals shall be located in accordance with 505.16(C)(2)(a), (C)(2)(b), and (C)(2)(c).

(a) *Explosionproof and Flameproof Enclosures.* Cables entering enclosures required to be flameproof or explosionproof shall be sealed at the point of entrance. The seal shall comply with 505.16(D). Multiconductor or optical multifiber cables with a gas/vaportight continuous sheath capable of transmitting gases or vapors through the cable core shall be sealed in the Zone 2 location after removing the jacket and any other coverings so that the sealing compound surrounds each individual insulated conductor or optical fiber tube in such a manner as to minimize the passage of gases and vapors. Multiconductor or optical multifiber cables in conduit shall be sealed as described in 505.16(B)(4).

Exception No. 1: Cables passing from an enclosure or room that is unclassified as a result of Type Z pressurization into a Zone 2 location shall not require a seal at the boundary.

Exception No. 2: Shielded cables and twisted pair cables shall not require the removal of the shielding material or separation of the twisted pairs, provided the termination is by an approved means to minimize the entrance of gases or vapors and prevent propagation of flame into the cable core.

(b) Restricted Breathing Enclosures. Cables entering enclosures required to be restricted breathing shall be sealed at the point of entrance. The seal shall comply with 505.16(D). Multiconductor or optical multifiber cables with a gas/vaportight continuous sheath capable of transmitting gases or vapors through the cable core shall be sealed in the Zone 2 location after removing the jacket and any other coverings so that the sealing compound surrounds each individual insulated conductor or optical fiber tube in such a manner as to minimize the passage of gases and vapors. Multiconductor or optical multifiber cables in conduit shall be sealed as described in 505.16(B)(4) .

Exception No. 1: Cables passing from an enclosure or room that is unclassified as a result of Type Z pressurization into a Zone 2 location shall not require a seal at the boundary.

Exception No. 2: Shielded cables and twisted pair cables shall not require the removal of the shielding material or separation of the twisted pairs, provided the termination is listed for the location.

(c) *Cables That Will Not Transmit Gases or Vapors.* Cables with a gas/vaportight continuous sheath and that will not transmit gases or vapors through the cable core in excess of the quantity permitted for seal fittings shall not be required to be sealed except as required in 505.16(C)(2)(b). The minimum length of such cable run shall not be less than the length that limits gas or vapor flow through the cable core to the rate permitted for seal fittings [200 cm^3/hr (0.007 ft^3/hr) of air at a pressure of 1500 pascals (6 in. of water)].

Informational Note No. 1: For further information on construction, testing, and marking of cables, cable fittings, and cord connectors, see ANSI/UL 2225-2013, *Cables and Cable-Fittings for Use in Hazardous (Classified) Locations*.

Informational Note No. 2: The cable core does not include the interstices of the conductor strands.

(d) *Cables Capable of Transmitting Gases or Vapors.* Cables with a gas/vaportight continuous sheath capable of transmitting gases or vapors through the cable core shall not be required to be sealed except as required in 505.16(C)(2)(b), unless the cable is attached to process equipment or devices that may cause a pressure in excess of 1500 pascals (6 in. of water) to be exerted at a cable end, in which case a seal, barrier, or other means shall be provided to prevent migration of flammables into an unclassified area.

Exception: Cables with an unbroken gas/vaportight continuous sheath shall be permitted to pass through a Zone 2 location without seals.

(e) *Cables Without Gas/Vaportight Continuous Sheath.* Cables that do not have gas/vaportight continuous sheath shall be sealed at the boundary of the Zone 2 and unclassified location in such a manner as to minimize the passage of gases or vapors into an unclassified location.

Informational Note: The cable sheath may be either metal or a nonmetallic material.

Statement of Problem and Substantiation for Public Input

Industry is requesting clear and enforceable requirements for sealing of cables entering restricted breathing type “nR” enclosures, and are needed to minimize the current confusion regarding direct entry into type “nR electrical enclosures. Because the permitted cable constructions in 505.16 are capable of the passage of gases and vapors, the cable termination fitting needs a sealing means that blocks the passage of gases and vapors such that the installed “nR” enclosure can be compliant with restricted breathing tests.

Submitter Information Verification

Submitter Full Name: Paul Kelly
Organization: UL LLC
Street Address:
City:
State:
Zip:
Submittal Date: Mon Aug 03 11:43:57 EDT 2020
Committee: NEC-P14

Committee Statement

Resolution: FR-8555-NFPA 70-2021

Statement: There is a need for enforceable requirements for sealing cables that enter breathing type “nR” enclosures and to clear up any confusion about direct entry into them. Cables permitted in 505.16 are capable of passing gases and vapors creating a need to seal the cables.

Public Input No. 2577-NFPA 70-2020 [Section No. 505.17(A)]

(A) Flexible Cords, Zones 1 and 2.

A flexible cord shall be permitted for connection between portable lighting equipment or other portable utilization equipment and the fixed portion of their supply circuit. Flexible cord shall also be permitted for that portion of the circuit where the fixed wiring methods of 505.15(B) and (C) cannot provide the necessary degree of movement for fixed and mobile electrical utilization equipment in an industrial establishment ~~where conditions of maintenance and engineering supervision ensure that only qualified persons install and service the installation~~ , and where the flexible cord is protected by location or by a suitable guard from damage. The length of the flexible cord shall be continuous. Where flexible cords are used, the cords shall comply with the following:

(1) Be of a type listed for extra-hard usage.

(2) Contain, in addition to the conductors of the circuit, an equipment grounding conductor complying with 400.23.

(3) Be connected to terminals or to supply conductors in an approved manner.

(4) Be supported by clamps or by other suitable means in such a manner that there will be no tension on the terminal connections.

(5) Be terminated with a listed cord connector that maintains the type of protection where the flexible cord enters boxes, fittings, or enclosures that are required to be explosionproof or flameproof.

(6) Cord entering an increased safety “e” enclosure shall be terminated with a listed increased safety “e” cord connector.

Informational Note: See 400.10 for permitted uses of flexible cords.

Electric submersible pumps with means for removal without entering the wet-pit shall be considered portable utilization equipment. The extension of the flexible cord within a suitable raceway between the wet-pit and the power source shall be permitted.

Electric mixers intended for travel into and out of open-type mixing tanks or vats shall be considered portable utilization equipment.

Informational Note: See 505.18 for flexible cords exposed to liquids having a deleterious effect on the conductor insulation.

Statement of Problem and Substantiation for Public Input

The term industrial establishment is used throughout Articles 500 through 506. Where the term is used the following text is added: "restricted access where the conditions of maintenance and engineering supervision ensure that only qualified persons install and service the installation. By creating a definition, the added text can be removed from each location where the term appears. This will remove clutter from the section or subdivision where the term appears which will improve readability.

Related Public Inputs for This Document

Related Input	Relationship
Public Input No. 2494-NFPA 70-2020 [New Definition after Definition: Inherently Safe Optical Ra...]	

Submitter Information Verification

Submitter Full Name: John Simmons
Organization: Florida East Coast JATC
Street Address:
City:
State:
Zip:
Submittal Date: Mon Aug 24 19:34:23 EDT 2020
Committee: NEC-P14

Committee Statement

Resolution: The recommendation is predicated on the inclusion of a new definition of Industrial Establishments in Article 100. This requires action by CMP-1 during the First Draft phase of the revision process. If accepted, comments will be submitted for action during the Second Draft phase of the revision process.

Public Input No. 2855-NFPA 70-2020 [New Section after 505.20(C)]

TITLE OF NEW CONTENT

Type your content here ...Exception No. 5: The installation of motors in accordance with 501.125(B) shall be permitted.

Statement of Problem and Substantiation for Public Input

Exception No. 5 to 505.20(C) is needed to add the requirements for control of temperatures for space heaters and the permission for nonincendive sliding contact shaft bonding devices to be acceptable for Zone 2 locations and are covered in 501.125(B).

Submitter Information Verification

Submitter Full Name: Frederick Bried
Organization:
Affiliation: Self
Street Address:
City:
State:
Zip:
Submittal Date: Wed Sep 02 18:33:53 EDT 2020
Committee: NEC-P14

Committee Statement

Resolution: FR-8486-NFPA 70-2021

Statement: Adding the provisions of 501.125(B) (4) and (5) for surface temperatures related to space heaters and sliding contact shaft bonding is warranted. However, instead of cross-referencing to 501.125(B), the TG has added these to the existing exceptions in 505.20(C) to avoid an unnecessary cross reference and redundancy. Informational Note is reworded to meet the requirements of NEC® Style Manual 3.1.3.1. This is simply an editorial change and not intended to change the intent of the informational note.

Public Input No. 2854-NFPA 70-2020 [Section No. 505.20(C)]

(C) Zone 2.

In Zone 2 locations, only equipment specifically listed and marked as suitable for the location shall be permitted.

Exception No. 1: Equipment listed for use in Zone 0 or Zone 1 locations for the same gas, or as permitted by 505.9(B)(2), and with a suitable temperature class, shall be permitted.

Exception No. 2: Equipment identified for Zone 1 or Zone 2 type of protection "p" shall be permitted.

Exception No. 3: Equipment identified for use in Class I, Division 1 or Division 2 locations for the same gas, or as permitted by 505.9(B)(2), and with a suitable temperature class shall be permitted.

Exception No. 4: In Zone 2 locations, the installation of open or nonexplosionproof or nonflameproof enclosed motors, such as squirrel-cage induction motors without brushes, switching mechanisms, or similar arc-producing devices that are not identified for use in a Zone 2 location shall be permitted.

Informational Note No. 1: It is important to consider the temperature of internal and external surfaces that may be exposed to the flammable atmosphere.

Informational Note No. 2: It is important to consider the risk of ignition due to currents arcing across discontinuities and overheating of parts in multisection enclosures of large motors and generators. Such motors and generators may need equipotential bonding jumpers across joints in the enclosure and from enclosure to ground. Where the presence of ignitible gases or vapors is suspected, clean air purging may be needed immediately prior to and during start-up periods.

Informational Note No. 3: For further information on the application of electric ~~motors~~ machines, including shaft bonding devices and discharge energy calculations , in Zone 2 hazardous (classified) locations, ~~see IEEE 1349-2011, *IEEE Guide* for *for the Application of Electric Motors in* Class I *Class I , Division 2 and* Class I *Class I , Zone 2 Hazardous (Classified) Locations* .~~ see IEEE Std 1349-2021, *IEEE Guide for the Application of Electric Machines in Zone 2 and Class I, Division 2 Hazardous (Classified) Locations*

Statement of Problem and Substantiation for Public Input

In the 2017 NEC, sliding contact shaft bonding devices were added to 501.125(B)(5). The 2011 edition of IEEE Std 1349 includes information on shaft bonding devices and includes discharge energy calculations.

In response to industry interest, the 2021 edition has substantially increased information for the application of shaft bonding devices, provides more detailed calculation methods including a graph/table method for capacitive ignition energy, provides a measurement method for determining discharge energy, and adds the IEEE 1349 Discharge Energy Calculator. IEEE Std 1349-2011 is undergoing revision and updating and will be approved in 2021.

Submitter Information Verification

Submitter Full Name: Frederick Bried

Organization:

Affiliation: Self
Street Address:
City:
State:
Zip:
Submittal Date: Wed Sep 02 18:25:36 EDT 2020
Committee: NEC-P14

Committee Statement

Resolution: The updated reference is to a standard revision that has not yet been released.

Public Input No. 2127-NFPA 70-2020 [Section No. 505.25]

505.25 Grounding and Bonding.

~~Regardless of the voltage of the electrical system, grounding and bonding shall comply with Article 250 and the requirements in 505.25(A) and (B).~~

~~**(A)** Bonding.~~

~~The locknut-bushing and double-locknut types of contacts shall not be depended on for bonding purposes, but bonding jumpers with proper fittings or other approved means of bonding shall be used. Such means of bonding shall apply to all intervening raceways, fittings, boxes, enclosures, and so forth, between Class I locations and the point of grounding for service equipment or point of grounding of a separately derived system.~~

~~*Exception: The specific bonding means shall be required only to the nearest point where the grounded circuit conductor and the grounding electrode are connected together on the line side of the building or structure disconnecting means as specified in 250.32(B) , provided the branch-circuit overcurrent protection is located on the load side of the disconnecting means.*~~

~~**(B)** Types of Equipment Grounding Conductors.~~

~~Flexible metal conduit and liquidtight flexible metal conduit shall include an equipment bonding jumper of the wire type in compliance with 250.102 .~~

~~*Exception: In Zone 2 locations, the bonding jumper shall be permitted to be deleted where all of the following conditions are met:*~~

~~*(1) Listed liquidtight flexible metal conduit 1.8 m (6 ft) or less in length, with fittings listed for grounding, is used.*~~

~~*(2) Overcurrent protection in the circuit is limited to 10 amperes or less.*~~

~~*(3) The load is not a power utilization load.*~~

All electrical equipment in Zone 0, 1, and 2 hazardous locations shall be grounded and bonded as required in Article 250.

Informational Note: See 250.100 for specific grounding and bonding requirements for hazardous (classified) locations.

Statement of Problem and Substantiation for Public Input

This a companion proposal for one submitted for the revision of Section 250.100.

Related Public Inputs for This Document

Related Input	Relationship
Public Input No. 1252-NFPA 70-2020 [Section No. 250.100]	
Public Input No. 2125-NFPA 70-2020 [Section No. 502.30]	
Public Input No. 2124-NFPA 70-2020 [Section No. 501.30]	
Public Input No. 2126-NFPA 70-2020 [Section No. 503.30]	
Public Input No. 2129-NFPA 70-2020 [Section No. 348.60]	
Public Input No. 2130-NFPA 70-2020 [Section No. 350.60]	
Public Input No. 2131-NFPA 70-2020 [Section No. 506.25]	

Public Input No. 2132-NFPA 70-2020 [Section No. 250.118]

Submitter Information Verification

Submitter Full Name: Paul Guidry
Organization: Fluor Enterprises, Inc.
Affiliation: Associated Builders and Contractors
Street Address:
City:
State:
Zip:
Submittal Date: Sun Aug 02 12:10:59 EDT 2020
Committee: NEC-P14

Committee Statement

Resolution: A first revision has been developed to revise the entire section. The language concerning the locknut/bushing and double locknut connections remains in the first revision. The intent of requiring bonding jumpers is to reduce the chance of arcing which may occur with mechanical devices (locknuts and bushings) which may loosen. The proposed listing requirement is unnecessary as Article 250 provides the listing requirements for grounding and bonding devices. The proposed addition of the term equipment grounding conductor in (B) does not meet the intent of the subdivision. An equipment bonding jumper connects two parts of the equipment grounding system. Liquidtight is approved in Class II, Divisions 1 and 2 only where flexibility is needed. The bonding jumper ensures integrity of the grounding path.

Public Input No. 2596-NFPA 70-2020 [Section No. 505.25]

505.25 Grounding and Bonding ~~.~~ Zone 1 and Zone 2

Regardless of the voltage of the electrical system, ~~grounding and bonding~~ wiring and equipment in Zone 1 and Zone 2 locations shall comply with ~~Article 250 and~~ the requirements ~~in~~ of 505.25(A) and 505.25 (B).

(A) Grounding

Wiring and equipment in Zone 1 and Zone 2 shall be grounded as required in Article 250.

(B) Bonding.

The locknut-bushing and double-locknut types of contacts shall not be depended on for bonding purposes, but bonding jumpers with proper fittings or other approved means of bonding shall be used. Such means of bonding shall apply to all intervening raceways, fittings, boxes, enclosures, and ~~so forth~~ other parts of the raceway systems , between ~~Class I~~ the Zone 1 and Zone 2 locations and the point of grounding for service equipment or point of grounding of a separately derived system.

Exception: The specific bonding means shall be required only to the nearest point where the grounded circuit conductor and the grounding electrode are connected together on the line side of the building or structure disconnecting means as specified in 250.32(B), provided the branch-circuit overcurrent protection is located on the load side of the disconnecting means.

~~**(B)** Types of Equipment Grounding Conductors.~~

Flexible metal conduit and liquidtight flexible metal conduit shall include an equipment bonding jumper of the wire type in compliance with 250.102 .

Exception: In Zone 2 locations, the bonding jumper shall be permitted to be deleted where all of the following conditions are met:

(1) Listed liquidtight flexible metal conduit 1.8 m (6 ft) or less in length, with fittings listed for grounding, is used.

(2) Overcurrent protection in the circuit is limited to 10 amperes or less.

(3) The load is not a power utilization load.

Statement of Problem and Substantiation for Public Input

Section 505.25 provides requirements for grounding and bonding. There is only one requirement for grounding, and it is to comply with Article 250. All the other requirements in the section apply to bonding, however the current text has a bonding requirement under subdivision (B) which is titled "types of equipment grounding conductors". The subdivisions addresses an equipment bonding jumper and refers to 250.102 which does not apply to equipment grounding conductors. A major part of this proposal reorganizes the section and places the grounding requirement in subdivision (A) Grounding, and the bonding requirements in subdivision (B) Bonding. The proposal changed the word "approved" in the phrase "or other approved means" to "identified". The word approved places the responsibility of deciding the suitability of a product on the authority having jurisdiction which in some cases may lead to inconsistency. The term identified provides the AHJ with some guidance in deciding the suitability of the bonding means. Also, the phrase "so forth" is changed to "other parts of raceway systems". The phrase so forth is ambiguous. The revised wording would add clarity. The term Class I is removed to be consistent with the Zone class designations.

Related Public Inputs for This Document

Related Input	Relationship
Public Input No. 1923-NFPA 70-2020 [Section No. 501.30]	
Public Input No. 1925-NFPA 70-2020 [Section No. 502.30]	
Public Input No. 1981-NFPA 70-2020 [Section No. 503.30]	
Public Input No. 2602-NFPA 70-2020 [Section No. 502.30]	
Public Input No. 2604-NFPA 70-2020 [Section No. 503.30]	
Public Input No. 2606-NFPA 70-2020 [Section No. 501.30]	

Submitter Information Verification

Submitter Full Name: John Simmons
Organization: Florida East Coast JATC
Street Address:
City:
State:
Zip:
Submittal Date: Tue Aug 25 14:17:18 EDT 2020
Committee: NEC-P14

Committee Statement

Resolution: FR-8386-NFPA 70-2021

Statement: The section number has been revised for consistency throughout the hazardous (classified) location articles. Section 4.1.4 of the 2020 NEC Style Manual prohibits references to an entire article, with the exception of Article 100. As such, the corresponding language in this section is revised to refer to Parts V and VI of Article 250 in compliance with the Style Manual, without changing the intent of the section. The exceptions have been revised to positive text as directed by the Style Manual. In addition, the section is updated to require “bonding and grounding” to meet the intent of the Article 250 requirements. The words “in accordance with the requirements of” do not add to the charging language and are deleted for brevity. The committee is deleting “and so forth” and adding cable trays into this section to make it clear that cable trays must be bonded in the same manner as raceways. The code panel is removing the word “intervening” because it is unnecessary but adding “metal” so it’s clear that this requirement does not apply to nonmetallic raceways or cable trays. The requirement for metal struts, angles, or channels is added to make it clear when they are used for type TC-ER, PLTC-ER, or ITC-ER cables, they must be bonded accordingly. Finally, “Power Utilization Load” is currently not defined and in the interest of usability, the code making panel is clarifying the intent by stating in which circuits flexible liquidtight metal conduit is not required to have an additional internal equipment bonding jumper.

Public Input No. 4471-NFPA 70-2020 [Section No. 506.1]

506.1 Scope.

This article covers the requirements for the zone classification system as an alternative to the division classification system covered in ~~Article~~ ~~500~~ ~~, Article~~ ~~502~~ ~~, and Article~~ ~~503~~ - the Class II, and Class III hazardous (classified) location requirements for electrical and electronic equipment and wiring for all voltages in Zone 20, Zone 21, and Zone 22 hazardous (classified) locations where fire and explosion hazards may exist due to combustible dusts or ignitible fibers/flyings.

Informational Note No. 1: ~~For~~ See Part III of Articles 501, 502, or 503 for the requirements for electrical and electronic equipment and wiring for all voltages in Class I, Division 1 or Division 2; Class II, Division 1 or Division 2; Class III, Division 1 or Division 2; ~~Zone 0; Zone 1; or Zone 2~~ hazardous (classified) locations where fire or explosion hazards may exist due to flammable gases or vapors, flammable liquids, or combustible dusts or ignitible fibers/flyings~~, refer to Articles~~ ~~500~~ ~~through~~ ~~505~~ ~~.~~ .

Informational Note No. 2. See 505.20 or 505.22 for Zone 0; Zone 1; or Zone 2 hazardous (classified) locations where fire or explosion hazards may exist due to flammable gases or vapors, or flammable liquids.

Informational Note No. ~~2~~ 3 : Zone 20, Zone 21, and Zone 22 area classifications are based on the modified IEC area classification system as defined in ANSI/ISA 60079-10-2 (12.10.05)-2013, *Explosive Atmospheres — Part 10-2: Classification of Areas — Combustible Dust Atmospheres*.

Informational Note No. ~~3~~ 4 : The unique hazards associated with explosives, pyrotechnics, and blasting agents are not addressed in this article.

Informational Note No. 4 5 : NFPA 499-2017, *Recommended Practice for the Classification of Combustible Dusts and of Hazardous (Classified) Locations for Electrical Installations in Chemical Process Areas*, provides additional information for classification of hazardous (classified) locations using Zone methodology.

Statement of Problem and Substantiation for Public Input

Section 4.1.4 of the 2020 NEC(r) Style Manual prohibits references to an entire article, with the exception of Article 100. The charging language was changed to refer to "Class II, or Class III hazardous (classified) location requirements" and the informational note No 1. was divided into two notes so it could properly reference the parts of the articles that applied for the Division articles or the Sections of Article 505 that apply to Zone classified systems. These changes should meet the style manual objective without changing the intent of the Code.

Submitter Information Verification

Submitter Full Name: Richard Holub
Organization: The DuPont Company, Inc.
Street Address:
City:
State:
Zip:
Submittal Date: Thu Sep 10 13:37:56 EDT 2020
Committee: NEC-P14

Committee Statement

Resolution: FR-8642-NFPA 70-2021

Statement: The scope statement was expanded to clearly describe what is not covered in this Article, similar to 500.1 and 505.1, and Informational Note No 3 is deleted as this is now written in the actual scope. Informational Note No. 4 is renumbered accordingly. This is simply an editorial change and not intended to change the intent of the informational notes.

Public Input No. 717-NFPA 70-2020 [Section No. 506.1]

506.1 Scope.

This article covers the requirements for the zone classification system as an alternative to the division classification system covered in Article 500, Article 502, and Article 503 for electrical and electronic equipment and wiring for all voltages in Zone 20, Zone 21, and Zone 22 hazardous (classified) locations where fire and explosion hazards may exist due to combustible dusts or ignitible fibers/flyings.

Informational Note No. 1: For the requirements for electrical and electronic equipment and wiring for all voltages in Class I, Division 1 or Division 2; Class II, Division 1 or Division 2; Class III, Division 1 or Division 2; Zone 0; Zone 1; or Zone 2 hazardous (classified) locations where fire or explosion hazards may exist due to flammable gases or vapors, flammable liquids, or combustible dusts or ignitible fibers/flyings, refer to Articles 500 through 505.

Informational Note No. 2: Zone 20, Zone 21, and Zone 22 area classifications are based on the modified IEC area classification system as defined in ANSI/~~ISA~~ UL 60079-10-2 ~~(12.10.05)-2013~~ , *Explosive Atmospheres — Part 10-2: Classification of Areas — Combustible Dust Atmospheres*.

Informational Note No. 3: The unique hazards associated with explosives, pyrotechnics, and blasting agents are not addressed in this article.

Informational Note No. 4: NFPA 499-2017, *Recommended Practice for the Classification of Combustible Dusts and of Hazardous (Classified) Locations for Electrical Installations in Chemical Process Areas*, provides additional information for classification of hazardous (classified) locations using Zone methodology.

Statement of Problem and Substantiation for Public Input

ANSI/ISA 60079-10-2 (12.10.05)-2013 has been replaced by ANSI/UL 60079-10-2

Note: The U.S. is in the process of adopting IEC 60079-10-2 as ANSI/UL 60079-10-2 with National differences. This adoption is expected to be in place prior to the Second Draft Public Comment Closing Date.

See also PI Nos.718, 719 and 720.

Related Public Inputs for This Document

Related Input	Relationship
Public Input No. 718-NFPA 70-2020 [Section No. 506.5(B)(1)]	
Public Input No. 719-NFPA 70-2020 [Section No. 506.5(B)(2)]	
Public Input No. 720-NFPA 70-2020 [Section No. 506.5(B)(3)]	
Public Input No. 718-NFPA 70-2020 [Section No. 506.5(B)(1)]	
Public Input No. 719-NFPA 70-2020 [Section No. 506.5(B)(2)]	
Public Input No. 720-NFPA 70-2020 [Section No. 506.5(B)(3)]	

Submitter Information Verification

Submitter Full Name: Paul Kelly

Organization: UL LLC
Street Address:
City:
State:
Zip:
Submittal Date: Fri Mar 20 14:21:37 EDT 2020
Committee: NEC-P14

Committee Statement

Resolution: The updated referenced standard has not been issued at this time.

Public Input No. 4482-NFPA 70-2020 [Section No. 506.3]

506.3 Other Articles.

All other applicable rules contained in this *Code* shall apply to electrical equipment and wiring installed in hazardous (classified) locations .

~~Exception: As~~

except as modified by

~~Article 504 and~~

this article.

Exception: Intrinsically Safe Systems installed in accordance with the intrinsically safe systems article are exempt from the other code requirements as stated in that article

Statement of Problem and Substantiation for Public Input

Section 4.1.4 of the 2020 NEC(r) Style Manual prohibits references to an entire article, with the exception of Article 100. Section 90.3 makes the code arrangement clear and this section doesn't change that so it appears to be unnecessary in the usability or enforcement of the Code. This attempted rewrite will accomplish the requirement to not specifically refer to an entire article but the CMP may wish to eliminate this section to correlate with the proposed action in PI 4385.

Related Public Inputs for This Document

Related Input	Relationship
Public Input No. 4385-NFPA 70-2020 [Section No. 500.3]	
Public Input No. 4455-NFPA 70-2020 [Section No. 505.3]	

Submitter Information Verification

Submitter Full Name: Richard Holub
Organization: The DuPont Company, Inc.
Street Address:
City:
State:
Zip:
Submittal Date: Thu Sep 10 13:52:59 EDT 2020
Committee: NEC-P14

Committee Statement

Resolution: FR-8723-NFPA 70-2021

Statement: This section is redundant to 90.3 and does not comply with the NEC® Style Manual section 4.1.4. As such, it is being deleted. This does not change the code or the fact that intrinsically safe systems are permitted in Zone 20, 21, and 22 locations as permitted in Section 506.15.

Public Input No. 1130-NFPA 70-2020 [Section No. 506.4]

506.4 Documentation.

Areas designated as hazardous (classified) locations shall be properly documented. This documentation shall be available to those authorized to design, install, inspect, maintain, or operate electrical equipment.

Informational Note No. 1: For additional information concerning the installation of equipment utilizing optical emissions technology (such as laser equipment) that could potentially become an ignition source in hazardous (classified) locations, see ANSI/UL 60079-28-2017, *Explosive Atmospheres — Part 28: Protection of equipment and transmission systems using optical radiation*.

Informational Note No. 2: For information on electrical resistance trace heating for hazardous (classified) locations, see ANSI/UL 60079-30-1-2017, *Standard for Explosive Atmospheres — Part 30-1: Electrical Resistance Trace Heating — General and Testing Requirements*, and ~~ANSI~~ IEC /IEEE 60079-30-2-2015, *Explosive Atmospheres — Part 30-2: Electrical resistance trace heating — Application guide for design, installation and maintenance*.

Informational Note No. 3: For information on electric skin effect trace heating for hazardous (classified) locations, see IEEE 844.1-2017/CSA C22.2 No. 293.1-17, *IEEE/CSA Standard for Skin Effect Trace Heating of Pipelines, Vessels, Equipment, and Structures — General, Testing, Marking, and Documentation Requirements*, and IEEE 844.2-2017/CSA C293.2-17, *IEEE/CSA Standard for Skin Effect Trace Heating of Pipelines, Vessels, Equipment, and Structures — Application Guide for Design, Installation, Testing, Commissioning, and Maintenance*.

Informational Note No.4 : For information on electric impedance heating for hazardous (classified) locations, see I *EEE 844.3-2019/CSA C22.2 No.293.3 :19, Standard for Impedance Heating of Pipelines and Equipment - General, Testing, Marking, and Documentation Requirements* and *IEEE 844.4-2019/CSA C293.4 :19,Standard for Impedance Heating of Pipelines and Equipment - Application Guide for Design, Installation, Testing, Commissioning, and Maintenance.*

Statement of Problem and Substantiation for Public Input

This proposal updates information from industry standards. It makes available the most up-to-date product and marking requirements and provides criteria to determine the suitability when utilized in industrial and commercial applications. The information should help provide electrical, mechanical durability such that in normal use its performance is reliable and poses no danger to the user or surroundings

Submitter Information Verification

Submitter Full Name: Ben Johnson
Organization: [Not Specified]
Affiliation: Thermon
Street Address:
City:
State:
Zip:

Submittal Date: Mon May 18 14:10:56 EDT 2020
Committee: NEC-P14

Committee Statement

Resolution: FR-8690-NFPA 70-2021

Statement: The standards references were updated to reflect the current editions/dates. These revisions correlate with the revision made in 500.4. References to product standards on protection methods were removed.

Public Input No. 2256-NFPA 70-2020 [Section No. 506.4]

506.4 Documentation.

Areas designated as hazardous (classified) locations shall be properly documented. This documentation shall be available to those authorized to design, install, inspect, maintain, or operate electrical equipment.

Informational Note No. 1: For additional information concerning the installation of equipment utilizing optical emissions technology (such as laser equipment) that could potentially become an ignition source in hazardous (classified) locations, see ANSI/UL 60079-28-2017, *Explosive Atmospheres — Part 28: Protection of equipment and transmission systems using optical radiation*.

Informational Note No. 2: For information on electrical resistance trace heating for hazardous (classified) locations, see ANSI/UL 60079-30-1-2017, *Standard for Explosive Atmospheres — Part 30-1: Electrical Resistance Trace Heating — General and Testing Requirements*, and ~~ANSI/~~ IEEE 60079-30-2-2015, *Explosive Atmospheres — Part 30-2: Electrical resistance trace heating — Application guide for design, installation and maintenance*.

Informational Note No. 3: For information on electric skin effect trace heating for hazardous (classified) locations, see IEEE 844.1-2017/CSA C22.2 No. 293.1-17, *IEEE/CSA Standard for Skin Effect Trace Heating of Pipelines, Vessels, Equipment, and Structures — General, Testing, Marking, and Documentation Requirements*, and IEEE 844.2-2017/CSA C293.2-17, *IEEE/CSA Standard for Skin Effect Trace Heating of Pipelines, Vessels, Equipment, and Structures — Application Guide for Design, Installation, Testing, Commissioning, and Maintenance*.

Informational Note No.4 :For information on electric impedance heating, see *IEEE 844.3-2019/CSA C22.2 No.293.3 : 19, IEEE/CSA Standard for Impedance Heating of Pipelines and Equipment - General, Testing, Marking, and Documentation Requirements* and *IEEE 844.4-2019/CSA C293.4 :19,Standard for Impedance Heating of Pipelines and Equipment - Application Guide for Design, Installation, Testing, Commissioning, and Maintenance*

Statement of Problem and Substantiation for Public Input

This proposal updates information from industry standards. It makes available the most up-to-date product and marking requirements and provides criteria to determine the suitability when utilized in industrial and commercial applications. The information should help provide electrical, mechanical durability such that in normal use its performance is reliable and poses no danger to the user or surroundings

Submitter Information Verification

Submitter Full Name: Ben Johnson
Organization: [Not Specified]
Affiliation: Thermon
Street Address:
City:
State:
Zip:
Submittal Date: Wed Aug 12 13:53:49 EDT 2020

Committee: NEC-P14

Committee Statement

Resolution: FR-8690-NFPA 70-2021

Statement: The standards references were updated to reflect the current editions/dates. These revisions correlate with the revision made in 500.4. References to product standards on protection methods were removed.

Public Input No. 718-NFPA 70-2020 [Section No. 506.5(B)(1)]

(1) Zone 20.

A Zone 20 location is a location in which any of the following occur:

(1) Ignitible concentrations of combustible dust or ignitible fibers/flyings are present continuously.

(2) Ignitible concentrations of combustible dust or ignitible fibers/flyings are present for long periods of time.

Informational Note No. 1: As a guide to classification of Zone 20 locations, refer to ANSI/~~ISA~~ UL 60079-10-2 ~~(12.10.05)-2013~~ , *Explosive Atmospheres — Part 10-2: Classification of areas — Combustible dust atmospheres*.

Informational Note No. 2: Zone 20 classification includes locations inside dust containment systems; hoppers, silos, etc., cyclones and filters, dust transport systems, except some parts of belt and chain conveyors, etc.; blenders, mills, dryers, bagging equipment, etc.

(3) Group IIIC combustible dusts are present in quantities sufficient to be hazardous continuously or for long periods of time.

Statement of Problem and Substantiation for Public Input

ANSI/ISA 60079-10-2 (12.10.05)-2013 has been replaced by ANSI/UL 60079-10-2.

Note: The U.S. is in the process of adopting IEC 60079-10-2 as ANSI/UL 60079-10-2 with National differences. This adoption is expected to be in place prior to the Second Draft Public Comment Closing Date.

See also PI Nos.717, 719 and 720.

Related Public Inputs for This Document

Related Input	Relationship
Public Input No. 717-NFPA 70-2020 [Section No. 506.1]	
Public Input No. 719-NFPA 70-2020 [Section No. 506.5(B)(2)]	
Public Input No. 720-NFPA 70-2020 [Section No. 506.5(B)(3)]	
Public Input No. 717-NFPA 70-2020 [Section No. 506.1]	
Public Input No. 719-NFPA 70-2020 [Section No. 506.5(B)(2)]	
Public Input No. 720-NFPA 70-2020 [Section No. 506.5(B)(3)]	

Submitter Information Verification

Submitter Full Name: Paul Kelly
Organization: UL LLC
Street Address:
City:
State:
Zip:

Submittal Date: Fri Mar 20 14:24:38 EDT 2020
Committee: NEC-P14

Committee Statement

Resolution: The recommendation to include UL 60079-10-2 is not accepted because the standard is not yet published.

Public Input No. 719-NFPA 70-2020 [Section No. 506.5(B)(2)]

(2) Zone 21.

A Zone 21 location is a location where one of the following apply:

(1) Ignitible concentrations of combustible dust or ignitible fibers/flyings are likely to exist occasionally under normal operating conditions; or

(2) Ignitible concentrations of combustible dust or ignitible fibers/flyings may exist frequently because of repair or maintenance operations or because of leakage; or

(3) Equipment is operated or processes are carried on, of such a nature that equipment breakdown or faulty operations could result in the release of ignitible concentrations of combustible dust or ignitible fibers/flyings and also cause simultaneous failure of electrical equipment in a mode to cause the electrical equipment to become a source of ignition; or

(4) The location is adjacent to a Zone 20 location from which ignitible concentrations of dust or ignitible fibers/flyings could be communicated.

Exception: When communication from an adjacent Zone 20 location is minimized by adequate positive pressure ventilation from a source of clean air, and effective safeguards against ventilation failure are provided.

(5) Group IIIC combustible dusts are present in quantities sufficient to be hazardous occasionally; under normal or abnormal operating conditions; or frequently because of repair or maintenance operations or because of leakage.

Informational Note No. 1: As a guide to classification of Zone 21 locations, refer to ANSI/~~ISA~~ UL 60079-10-2 ~~(12.10.05)-2013~~ , *Explosive Atmospheres — Part 10-2: Classification of areas — Combustible dust atmospheres*.

Informational Note No. 2: This classification usually includes locations outside dust containment and in the immediate vicinity of access doors subject to frequent removal or opening for operation purposes when internal combustible mixtures are present; locations outside dust containment in the proximity of filling and emptying points, feed belts, sampling points, truck dump stations, belt dump over points, etc., where no measures are employed to prevent the formation of combustible mixtures; locations outside dust containment where dust accumulates and where due to process operations the dust layer is likely to be disturbed and form combustible mixtures; locations inside dust containment where explosive dust clouds are likely to occur (but neither continuously, nor for long periods, nor frequently) as, for example, silos (if filled and/or emptied only occasionally) and the dirty side of filters if large self-cleaning intervals are occurring.

Statement of Problem and Substantiation for Public Input

ANSI/ISA 60079-10-2 (12.10.05)-2013 has been replaced by ANSI/UL 60079-10-2.

Note: The U.S. is in the process of adopting IEC 60079-10-2 as ANSI/UL 60079-10-2 with National differences. This adoption is expected to be in place prior to the Second Draft Public Comment Closing Date.

See also PI Nos.717, 718 and 720.

Related Public Inputs for This Document

Related Input	Relationship

Public Input No. 717-NFPA 70-2020 [Section No. 506.1]
Public Input No. 718-NFPA 70-2020 [Section No. 506.5(B)(1)]
Public Input No. 720-NFPA 70-2020 [Section No. 506.5(B)(3)]
Public Input No. 717-NFPA 70-2020 [Section No. 506.1]
Public Input No. 718-NFPA 70-2020 [Section No. 506.5(B)(1)]
Public Input No. 720-NFPA 70-2020 [Section No. 506.5(B)(3)]

Submitter Information Verification

Submitter Full Name: Paul Kelly
Organization: UL LLC
Street Address:
City:
State:
Zip:
Submittal Date: Fri Mar 20 14:26:26 EDT 2020
Committee: NEC-P14

Committee Statement

Resolution: The recommendation to include UL 60079-10-2 is not accepted because the standard is not yet published.

Public Input No. 720-NFPA 70-2020 [Section No. 506.5(B)(3)]

(3) Zone 22.

A Zone 22 location is a location where one of the following apply:

(1) Ignitible concentrations of combustible dust or ignitible fibers/flyings are not likely to occur in normal operation and, if they do occur, will only persist for a short period; or

(2) Combustible dust or fibers/flyings are handled, processed, or used but in which the dust or fibers/flyings are normally confined within closed containers of closed systems from which they can escape only as a result of the abnormal operation of the equipment with which the dust or fibers/flyings are handled, processed, or used; or

(3) The location is adjacent to a Zone 21 location, from which ignitible concentrations of dust or fibers/flyings could be communicated.

Exception No. 1: When communication from an adjacent Zone 21 location is minimized by adequate positive pressure ventilation from a source of clean air, and effective safeguards against ventilation failure are provided.

Exception No. 2: For Group IIIC combustible dusts, there are only Zone 20 or 21 locations.

Informational Note No. 1: As a guide to classification of Zone 22 locations, refer to ANSI/~~ISA~~ UL 60079-10-2 ~~(12.10.05)-2013~~ , *Explosive Atmospheres — Part 10-2: Classification of areas — Combustible dust atmospheres*.

Informational Note No. 2: Zone 22 locations usually include outlets from bag filter vents, because in the event of a malfunction there can be emission of combustible mixtures; locations near equipment that has to be opened at infrequent intervals or equipment that from experience can easily form leaks where, due to pressure above atmospheric, dust will blow out; pneumatic equipment, flexible connections that can become damaged, etc.; storage locations for bags containing dusty product, since failure of bags can occur during handling, causing dust leakage; and locations where controllable dust layers are formed that are likely to be raised into explosive dust–air mixtures. Only if the layer is removed by cleaning before hazardous dust–air mixtures can be formed is the area designated unclassified.

Informational Note No. 3: Locations that normally are classified as Zone 21 can fall into Zone 22 when measures are employed to prevent the formation of explosive dust–air mixtures. Such measures include exhaust ventilation. The measures should be used in the vicinity of (bag) filling and emptying points, feed belts, sampling points, truck dump stations, belt dump over points, etc.

Statement of Problem and Substantiation for Public Input

ANSI/ISA 60079-10-2 (12.10.05)-2013 has been replaced by ANSI/UL 60079-10-2.

Note: The U.S. is in the process of adopting IEC 60079-10-2 as ANSI/UL 60079-10-2 with National differences. This adoption is expected to be in place prior to the Second Draft Public Comment Closing Date.

See also PI Nos.717, 718 and 719.

Related Public Inputs for This Document

Related Input	Relationship
Public Input No. 717-NFPA 70-2020 [Section No. 506.1]	

Public Input No. 718-NFPA 70-2020 [Section No. 506.5(B)(1)]
Public Input No. 719-NFPA 70-2020 [Section No. 506.5(B)(2)]
Public Input No. 717-NFPA 70-2020 [Section No. 506.1]
Public Input No. 718-NFPA 70-2020 [Section No. 506.5(B)(1)]
Public Input No. 719-NFPA 70-2020 [Section No. 506.5(B)(2)]

Submitter Information Verification

Submitter Full Name: Paul Kelly
Organization: UL LLC
Street Address:
City:
State:
Zip:
Submittal Date: Fri Mar 20 14:27:46 EDT 2020
Committee: NEC-P14

Committee Statement

Resolution: The recommendation to include UL 60079-10-2 is not accepted because the standard is not yet published.

Public Input No. 3432-NFPA 70-2020 [Section No. 506.6]

506.6 Material Groups.

For the purposes of testing, approval, and area classification, various air mixtures (not oxygen enriched) shall be grouped as required in 506.6(A), (B), and (C).

(A) Group IIIC.

Combustible metal dust. ~~Group IIIC shall be considered to be equivalent to Class II, Group E.~~

(B) Group IIIB.

Combustible dust other than combustible metal dust. ~~Group IIIB shall be considered to be equivalent to Class II, Groups F and G.~~

(C) Group IIIA.

~~Solid particles, including fibers, greater than 500 µm in nominal size, which could be suspended in air and could settle out of the atmosphere under their own weight. Group IIIA shall be considered to be equivalent to Class III.~~ Combustible fibers/flyings, not including combustible metals.

Informational Note: Examples of flyings include rayon, cotton (including cotton linters and cotton waste), sisal, jute, hemp, cocoa fiber, oakum, and baled waste kapok.

Statement of Problem and Substantiation for Public Input

The equivalence statements are no longer needed as the requirements for dust Zones are fully developed in Article 506. In the case of Group IIIA, the comparison is technically incorrect.

Submitter Information Verification

Submitter Full Name: Donald Ankele
Organization: UL LLC
Street Address:
City:
State:
Zip:
Submittal Date: Tue Sep 08 14:46:02 EDT 2020
Committee: NEC-P14

Committee Statement

Resolution: FR-8691-NFPA 70-2021
Statement: The material groups have been revised to correlate with NFPA 499.

Public Input No. 4486-NFPA 70-2020 [Section No. 506.7 [Excluding any Sub-Sections]]

~~Article~~ ~~506~~ - This article requires equipment construction and installation that ensures safe performance under conditions of proper use and maintenance.

Informational Note: It is important that inspection authorities and users exercise more than ordinary care with regard to the installation and maintenance of electrical equipment in hazardous (classified) locations.

Statement of Problem and Substantiation for Public Input

Section 4.1.4 of the 2020 NEC(r) Style Manual prohibits reference to an entire article, with the exception of Article 100. Changing to "this article" here accomplishes this and complies with the style manual, without changing the intent of the requirement.

Submitter Information Verification

Submitter Full Name: Richard Holub
Organization: The DuPont Company, Inc.
Street Address:
City:
State:
Zip:
Submittal Date: Thu Sep 10 13:58:46 EDT 2020
Committee: NEC-P14

Committee Statement

Resolution: FR-8726-NFPA 70-2021

Statement: Section 4.1.4 of the 2020 NEC(r) Style Manual prohibits reference to an entire article, with the exception of Article 100. Changing to "this article" here accomplishes this and complies with the style manual, without changing the intent of the requirement. The informational note is not necessary in this text as it duplicates requirement and is therefore deleted.

Public Input No. 2224-NFPA 70-2020 [New Section after 506.8(N)]

TITLE OF NEW CONTENT

506.8(O) Pressurized Room "p". This protection technique shall be permitted in Zone 21 and Zone 22 locations for which it is identified.

Statement of Problem and Substantiation for Public Input

Standard UL 60079-13-2020, Explosive Atmospheres – Part 13: Equipment protection by pressurized room "p" and artificially ventilated room "v" has been published. This publication provides requirements for rooms intended for human entry where either pressurization or forced ventilation is used as a means of reducing risk of explosion. Such equipment exists, and with publication of a standard, should be a permitted method of protection.

Related Public Inputs for This Document

Related Input	Relationship
Public Input No. 2217-NFPA 70-2020 [New Definition after Definition: Pressurized Enclosure "p".]	Add UL 60079-13 to Annex A

Submitter Information Verification

Submitter Full Name: William Fiske
Organization: Intertek Testing Services
Street Address:
City:
State:
Zip:
Submittal Date: Tue Aug 11 15:34:52 EDT 2020
Committee: NEC-P14

Committee Statement

Resolution: FR-8626-NFPA 70-2021

Statement: Add type of protection "p". This is added to support the addition of UL 60079-13 as a type of protection for rooms in addition to enclosures. Under the NEC Division system, there is permission for Other Protection Techniques as described in 500.7(P). This permits the ability for new and innovative designs to be certified for Division 1 or 2

applications that are outside the Scope of other Division system Protection Techniques (e.g. Intrinsic Safety, and Dust Ignitionproof). This revision provides a similar permission under the NEC Zone system. Informational Note is revised to Table 13, Chapter 9, to correlate with action taken on PI 2286.

Public Input No. 729-NFPA 70-2020 [New Section after 506.8(N)]

(O) Special Protection "s": This protection technique shall be permitted for apparatus and associated apparatus in Zone 20, Zone 21, or Zone 22 locations for which it is listed.

Statement of Problem and Substantiation for Public Input

Under the NEC Division system, there is permission for Other Protection Techniques as described in 500.7(L). This permits the ability for new and innovative designs to be certified for Division 1 or 2 applications that are outside the Scope of other Division system Protection Techniques (e.g. Explosionproof, Intrinsic Safety, and Dust Ignitionproof).

While there is no such permission under the NEC Zone system, there is such permission under the IEC Zone system based on IEC 60079-33, Explosive atmospheres – Part 33: Equipment protection by special protection “s”. The U.S. is in the process of adopting IEC 60079-33 as ANSI/UL 60079-33 with National differences. This adoption is expected to be in place prior to the Second Draft Public Comment Closing Date.

The anticipated ANSI/UL 60079-33 (as with the existing IEC 60079-33) is only intended for equipment that is outside the Scope of other ANSI/UL 60079 series protection technique standards.

Also see PI Nos. 726, 727, 728 and 730.

Related Public Inputs for This Document

Related Input	Relationship
Public Input No. 726-NFPA 70-2020 [New Definition after Definition: Spray Room.]	
Public Input No. 727-NFPA 70-2020 [New Section after 505.8(N)]	
Public Input No. 728-NFPA 70-2020 [Section No. 505.9(C)(2)]	
Public Input No. 730-NFPA 70-2020 [Section No. 506.9(C)(2)]	
Public Input No. 726-NFPA 70-2020 [New Definition after Definition: Spray Room.]	
Public Input No. 727-NFPA 70-2020 [New Section after 505.8(N)]	
Public Input No. 728-NFPA 70-2020 [Section No. 505.9(C)(2)]	
Public Input No. 730-NFPA 70-2020 [Section No. 506.9(C)(2)]	

Submitter Information Verification

Submitter Full Name: Paul Kelly
Organization: UL LLC
Street Address:
City:
State:
Zip:
Submittal Date: Fri Mar 20 17:28:31 EDT 2020
Committee: NEC-P14

Committee Statement

Resolution: FR-8626-NFPA 70-2021

Statement: Add type of protection “p”. This is added to support the addition of UL 60079-13 as a type of protection for rooms in addition to enclosures. Under the NEC Division system, there is permission for Other Protection Techniques as described in 500.7(P). This permits the ability for new and innovative designs to be certified for Division 1 or 2

applications that are outside the Scope of other Division system Protection Techniques (e.g. Intrinsic Safety, and Dust Ignitionproof). This revision provides a similar permission under the NEC Zone system. Informational Note is revised to Table 13, Chapter 9, to correlate with action taken on PI 2286.

Public Input No. 2264-NFPA 70-2020 [Section No. 506.9(C)(2)]

(2) Zone Equipment.

Equipment meeting one or more of the protection techniques described in 506.8 shall be marked with the following in the order shown:

(1) Zone in accordance with Table 506.9(C)(2)(3)

(2) Symbol “AEx”

(3) Protection technique(s) in accordance with Table 506.9(C)(2)(3)

(4) Material group in accordance with 506.6

(5) Maximum surface temperature in accordance with 506.9(D), marked as a temperature value in degrees Celsius, preceded by “T” and followed by the symbol “°C”

(6) Ambient temperature marking in accordance with 506.9(D)

(7) Equipment protection level (EPL)

Informational Note: EPLs (or equipment protection levels) are designated as G for gas, or D for dust, and are then followed by a letter (a, b, or c) to give the user a better understanding as to whether the equipment provides (a) a “very high,” (b) a “high,” or (c) an “enhanced” level of protection against ignition of an explosive atmosphere. For example, a Zone 21 AEx pb IIIB T165°C Db motor is marked with an EPL of “Db”.

Exception: Associated apparatus NOT suitable for installation in a hazardous (classified) location shall be required to be marked only with 506.9(C)(2)(2) and (3), and where applicable (4), but BOTH the symbol AEx in 506.9(C)(2)(2) and the symbol for the type of protection in 506.9(C)(2)(3) shall be enclosed within the same square brackets; for example, [AEx ia] IIIC.

Table 506.9(C)(2)(3) Equipment Suitability

Type of Protection	Marking	Permitted Location
Associated apparatus for Zone 20	[ia]	Unclassified*
Associated apparatus for Zone 21	[ib]	Unclassified*
Associated apparatus for Zone 22	[ic]	Unclassified*
Associated pressurization equipment	[p]	Unclassified*
Equipment Suitable for Class II, Division 1		
Intrinsic safety	ia; Class II, Division 1 Intrinsic Safety	
Protection by enclosure	ta	
Encapsulation	ma	
Optical radiation, inherently safe	op is, with EPL Da#	Zone 20
Optical radiation, with interlock	op sh, with EPL Da#	
EPL Da, with suitable type of protection†		
Equipment Suitable for Use in Zone 20		
Equipment Suitable for Use in Class II, Division 1		
Intrinsic safety	ib	
Protection by enclosure	tb	Zone 21
Pressurized enclosure	p; px, pxb; py; pyb	
Encapsulation	mb	
Electrical resistance trace heating	60079-30-1, with EPL Db#	

Type of Protection	Marking	Permitted Location
Skin effect trace heating	IEEE 844.1, with EPL Db#	
Optical radiation, inherently safe	op is, with EPL Db#	
Optical radiation, with interlock	op sh, with EPL Db#	
Optical radiation, protected	op pr, with EPL Db#	
EPL Db, with suitable type of protection†		
Equipment Suitable for Use in Zone 21		
Equipment Suitable for Use in Class II, Division 2		
Intrinsic safety	ic	
Protection by enclosure	tc	
Pressurized enclosure	pz; pzc	
Encapsulation	mc	
Electrical resistance trace heating	60079-30-1, with EPL Dc#	Zone 22
Skin effect trace heating	IEEE 844.1, with EPL Dc#	
Optical radiation, inherently safe	op is, with EPL Dc#	
Optical radiation, with interlock	op sh, with EPL Dc#	
Optical radiation, protected	op pr, with EPL Dc#	
EPL Dc, with suitable type of protection†		

#: Equipment marked with these types of protection is available in multiple levels of protection that are not specifically identified within the Ex marking.

*Permitted to be installed in a hazardous (classified) location if suitably protected using another type of protection.

†The EPL takes precedence over the types of protection. For example, “op is Db” is suitable for Zone 21 (not Zone 20). “60079-30-1 Dc” is suitable for Zone 22 (not Zone 21). Selection according to the marked EPL is critical to the safe application of this equipment.

Informational Note: The “D” suffix on the type of protection designation was employed prior to the introduction of Group IIIA, IIIB, and IIIC, which is now used to distinguish between the type of protection employed for Group II (Gases) or Group III (Dusts).

Additional Proposed Changes

File Name	Description	Approved
Table506.9C23.docx	Addition of ventilated room "v"	

Statement of Problem and Substantiation for Public Input

Standard UL 60079-13-2020, Explosive Atmospheres – Part 13: Equipment protection by pressurized room “p” and artificially ventilated room “v” has been published. This publication provides requirements for rooms intended for human entry where either pressurization or forced ventilation is used as a means of reducing risk of explosion. Such equipment exists, and with publication of a standard, should be a permitted method of protection. This adds the markings for pressurized rooms (Zone 21 and Zone 22).

Related Public Inputs for This Document

Related Input	Relationship
Public Input No. 2217-NFPA 70-2020 [New Definition after Definition: Pressurized Enclosure “p”.]	

Submitter Information Verification

Submitter Full Name: William Fiske
Organization: Intertek Testing Services
Street Address:
City:
State:
Zip:
Submittal Date: Wed Aug 12 15:51:45 EDT 2020
Committee: NEC-P14

Committee Statement

Resolution: FR-8644-NFPA 70-2021
Statement: This action deletes Table 506.9(C)(2)(3) and revises the text in 506.9 (C)(2)(1) and (C)(2)(3) to reference new Table 13 in Chapter 9 created by the action on Public Input 2287.

Table 506.9(C)(2)(3) Equipment Suitability

Type of Protection	Marking	Permitted Location
Equipment Suitable for Use in Zone 20		
Equipment Suitable for Use in Class II, Division 1		
Intrinsic safety	ib	
Protection by enclosure	tb	
Pressurized enclosure	p; px; pxb; py; pyb	
Pressurized room	p; pb	
Encapsulation	mb	Zone 21
[Continue Zone 21 without changes]		
Equipment Suitable for Use in Zone 21		
Equipment Suitable for Use in Class II, Division 2		
Intrinsic safety	ic	
Protection by enclosure	tc	
Pressurized enclosure	pz; pzc	
Pressurized room	pc	
Ventilated room	v; vc	
Encapsulation	mc	Zone 22
Electrical resistance trace heating	60079-30-1, with EPL Dc	
[Continue table without changes]		

Public Input No. 2286-NFPA 70-2020 [Section No. 506.9(C)(2)]

(2) Zone Equipment.

Equipment meeting one or more of the protection techniques described in 506.8 shall be marked with the following in the order shown:

(1) Zone in accordance with Table 506.9(C)(2)(3)

(2) Symbol “AEx”

(3) Protection technique(s) in accordance with Table ~~506.9~~ 13 (~~C)(2)(3)~~ Proposed)

(4) Material group in accordance with 506.6

(5) Maximum surface temperature in accordance with 506.9(D), marked as a temperature value in degrees Celsius, preceded by “T” and followed by the symbol “°C”

(6) Ambient temperature marking in accordance with 506.9(D)

(7) Equipment protection level (EPL)

Informational Note: EPLs (or equipment protection levels) are designated as G for gas, or D for dust, and are then followed by a letter (a, b, or c) to give the user a better understanding as to whether the equipment provides (a) a “very high,” (b) a “high,” or (c) an “enhanced” level of protection against ignition of an explosive atmosphere. For example, a Zone 21 AEx pb IIIB T165°C Db motor is marked with an EPL of “Db”.

Exception: Associated apparatus NOT suitable for installation in a hazardous (classified) location shall be required to be marked only with 506.9(C)(2)(2) and (3), and where applicable (4), but BOTH the symbol AEx in 506.9(C)(2)(2) and the symbol for the type of protection in 506.9(C)(2)(3) shall be enclosed within the same square brackets; for example, [AEx ia] IIIC.

~~Table 506.9(C)(2)(3) Equipment Suitability~~

~~Type of Protection Marking Permitted Location Associated apparatus for Zone 20 [ia] Unclassified * Associated apparatus for Zone 21 [ib] Unclassified * Associated apparatus for Zone 22 [ic] Unclassified * Associated pressurization equipment [p] Unclassified * Equipment Suitable for Class II, Division 1 - Intrinsic safety ia; Class II, Division 1 Intrinsic Safety Zone 20 Protection by enclosure ta Encapsulation ma Optical radiation, inherently safe op is, with EPL Da # Optical radiation, with interlock op sh, with EPL Da # EPL Da, with suitable type of protection ‡ - Equipment Suitable for Use in Zone 20 Zone 21 Equipment Suitable for Use in Class II, Division 1 Intrinsic safety ib Protection by enclosure tb Pressurized enclosure p; px, pxb; py; pyb Encapsulation mb Electrical resistance trace heating 60079-30-1, with EPL Db # Skin effect trace heating IEEE 844.1, with EPL Db # Optical radiation, inherently safe op is, with EPL Db # Optical radiation, with interlock op sh, with EPL Db # Optical radiation, protected op pr, with EPL Db # EPL Db, with suitable type of protection ‡ Equipment Suitable for Use in Zone 21 Zone 22 Equipment Suitable for Use in Class II, Division 2 Intrinsic safety ic Protection by enclosure tc Pressurized enclosure pz; pzc Encapsulation mc Electrical resistance trace heating 60079-30-1, with EPL Dc # Skin effect trace heating IEEE 844.1, with EPL Dc # Optical radiation, inherently safe op is, with EPL Dc # Optical radiation, with interlock op sh, with EPL Dc # Optical radiation, protected op pr, with EPL Dc # EPL Dc, with suitable type of protection ‡~~

~~# : Equipment marked with these types of protection is available in multiple levels of protection that are not specifically identified within the Ex marking.~~

~~* Permitted to be installed in a hazardous (classified) location if suitably protected using another type of protection.~~

~~‡ The EPL takes precedence over the types of protection. For example, “op is Db” is suitable for Zone 21 (not Zone 20). “60079-30-1 Dc” is suitable for Zone 22 (not Zone 21). Selection according to the marked EPL is critical to the safe application of this equipment.~~

~~Informational Note: The “D” suffix on the type of protection designation was employed~~

~~prior to the introduction of Group IIIA, IIIB, and IIIC, which is now used to distinguish between the type of protection employed for Group II (Gases) or Group III (Dusts).~~

Statement of Problem and Substantiation for Public Input

Replace the existing table with a comprehensive Table addressing all of the Protection Techniques or Types of Protection for Hazardous Locations in Articles 500 through 506.

Submitter Information Verification

Submitter Full Name: William Lawrence
Organization:
Street Address:
City:
State:
Zip:
Submittal Date: Thu Aug 13 15:41:30 EDT 2020
Committee: NEC-P14

Committee Statement

Resolution: FR-8644-NFPA 70-2021
Statement: This action deletes Table 506.9(C)(2)(3) and revises the text in 506.9 (C)(2)(1) and (C)(2)(3) to reference new Table 13 in Chapter 9 created by the action on Public Input 2287.

Public Input No. 723-NFPA 70-2020 [Section No. 506.9(C)(2)]

(2)_ Zone Equipment.

Equipment meeting one or more of the protection techniques described in 506.8 shall be marked with the following in the order shown:

(1) Zone in accordance with Table 506.9(C)(2)(3)

(2) Symbol “AEx”

(3) Protection technique(s) in accordance with Table 506.9(C)(2)(3)

(4) Material group in accordance with 506.6

(5) Maximum surface temperature in accordance with 506.9(D), marked as a temperature value in degrees Celsius, preceded by “T” and followed by the symbol “°C”

(6) Ambient temperature marking in accordance with 506.9(D)

(7) Equipment protection level (EPL)

Informational Note: EPLs (or equipment protection levels) are designated as G for gas, or D for dust, and are then followed by a letter (a, b, or c) to give the user a better understanding as to whether the equipment provides (a) a “very high,” (b) a “high,” or (c) an “enhanced” level of protection against ignition of an explosive atmosphere. For example, a Zone 21 AEx pb IIIB T165°C Db motor is marked with an EPL of “Db”.

Exception: Associated apparatus NOT suitable for installation in a hazardous (classified) location shall be required to be marked only with 506.9(C)(2)(2) and (3), and where applicable (4), but BOTH the symbol AEx in 506.9(C)(2)(2) and the symbol for the type of protection in 506.9(C)(2)(3) shall be enclosed within the same square brackets; for example, [AEx ia] IIIC.

Table 506.9(C)(2)(3) Equipment Suitability

Type of Protection	Marking	Permitted Location
Associated apparatus for Zone 20	[ia]	Unclassified *
Associated apparatus for Zone 21	[ib]	Unclassified *
Associated apparatus for Zone 22	[ic]	Unclassified *
Associated pressurization equipment	[p]	Unclassified *
Associated optical radiation equipment	[op is], [op pr], [op sh]	Unclassified ##, **
Equipment Suitable for Class II, Division 1		
Intrinsic safety	ia; Class II, Division 1 Intrinsic Safety	Zone 20
Protection by enclosure	ta	
Encapsulation	ma	
Optical radiation, inherently safe	op is, with EPL Da #	
Optical radiation, with interlock	op sh, with EPL Da #	
EPL Da, with suitable type of protection ‡		
Equipment Suitable for Use in Zone 20		Zone 21
Equipment Suitable for Use in Class II, Division 1		
Intrinsic safety	ib	
Protection by enclosure	tb	
Pressurized enclosure	p; px, pxb; py; pyb	
Encapsulation	mb	

Electrical resistance trace heating	60079-30-1, with EPL Db #	
Skin effect trace heating	IEEE 844.1, with EPL Db #	
Optical radiation, inherently safe	op is, with EPL Db #	
Optical radiation, with interlock	op sh, with EPL Db #	
Optical radiation, protected	op pr, with EPL Db #	
EPL Db, with suitable type of protection ‡		
Equipment Suitable for Use in Zone 21		
Equipment Suitable for Use in Class II, Division 2		
Intrinsic safety	ic	
Protection by enclosure	tc	
Pressurized enclosure	pz; pzc	
Encapsulation	mc	
Electrical resistance trace heating	60079-30-1, with EPL Dc #	Zone 22
Skin effect trace heating	IEEE 844.1, with EPL Dc #	
Optical radiation, inherently safe	op is, with EPL Dc #	
Optical radiation, with interlock	op sh, with EPL Dc #	
Optical radiation, protected	op pr, with EPL Dc #	
EPL Dc, with suitable type of protection ‡		

#: Equipment marked with these types of protection is available in multiple levels of protection that are not specifically identified within the Ex marking.

*Permitted to be installed in a hazardous (classified) location if suitably protected using another type of protection.

‡ The EPL takes precedence over the types of protection. For example, “op is Db” is suitable for Zone 21 (not Zone 20). “60079-30-1 Dc” is suitable for Zone 22 (not Zone 21). Selection according to the marked EPL is critical to the safe application of this equipment.

Permitted to be installed in unclassified locations if Dust Group, Temperature Classification, and EPL are indicated within the brackets as applicable.

** Permitted to be installed in Hazardous (classified) locations if suitably protected using another type of protection, and if Dust Group, Temperature Classification, and EPL are indicated within the brackets as applicable.

Informational Note: The “D” suffix on the type of protection designation was employed prior to the introduction of Group IIIA, IIIB, and IIIC, which is now used to distinguish between the type of protection employed for Group II (Gases) or Group III (Dusts).

Statement of Problem and Substantiation for Public Input

ANSI/UL 60079-28 permits associated optical radiation equipment. While UL 60079-28 only shows “op is” as an example of an associated type of protection, optical fiber cable could be part of a piece of “op pr” equipment installed outside the explosive atmosphere, with the cable extending into the atmosphere. Based on this, it would seem that [AEx op pr] could be an option too, with a similar argument being for [AEx op sh].

See also PI No. 722.

Related Public Inputs for This Document

Related Input	Relationship
Public Input No. 722-NFPA 70-2020 [Section No. 505.9(C)(2)]	
Public Input No. 722-NFPA 70-2020 [Section No. 505.9(C)(2)]	

Submitter Information Verification

Submitter Full Name: Paul Kelly
Organization: UL LLC
Street Address:
City:
State:
Zip:
Submittal Date: Fri Mar 20 15:03:25 EDT 2020
Committee: NEC-P14

Committee Statement

Resolution: FR-8644-NFPA 70-2021

Statement: This action deletes Table 506.9(C)(2)(3) and revises the text in 506.9 (C)(2)(1) and (C)(2)(3) to reference new Table 13 in Chapter 9 created by the action on Public Input 2287.

Public Input No. 730-NFPA 70-2020 [Section No. 506.9(C)(2)]

(2) Zone Equipment.

Equipment meeting one or more of the protection techniques described in 506.8 shall be marked with the following in the order shown:

(1) Zone in accordance with Table 506.9(C)(2)(3)

(2) Symbol “AEx”

(3) Protection technique(s) in accordance with Table 506.9(C)(2)(3)

(4) Material group in accordance with 506.6

(5) Maximum surface temperature in accordance with 506.9(D), marked as a temperature value in degrees Celsius, preceded by “T” and followed by the symbol “°C”

(6) Ambient temperature marking in accordance with 506.9(D)

(7) Equipment protection level (EPL)

Informational Note: EPLs (or equipment protection levels) are designated as G for gas, or D for dust, and are then followed by a letter (a, b, or c) to give the user a better understanding as to whether the equipment provides (a) a “very high,” (b) a “high,” or (c) an “enhanced” level of protection against ignition of an explosive atmosphere. For example, a Zone 21 AEx pb IIIB T165°C Db motor is marked with an EPL of “Db”.

Exception: Associated apparatus NOT suitable for installation in a hazardous (classified) location shall be required to be marked only with 506.9(C)(2)(2) and (3), and where applicable (4), but BOTH the symbol AEx in 506.9(C)(2)(2) and the symbol for the type of protection in 506.9(C)(2)(3) shall be enclosed within the same square brackets; for example, [AEx ia] IIIC.

Table 506.9(C)(2)(3) Equipment Suitability

Type of Protection	Marking	Permitted Location
Associated apparatus for Zone 20	[ia]	Unclassified *
Associated apparatus for Zone 21	[ib]	Unclassified *
Associated apparatus for Zone 22	[ic]	Unclassified *
Associated pressurization equipment	[p]	Unclassified *
Equipment Suitable for Class II, Division 1		
-		
Intrinsic safety	ia; Class II, Division 1 Intrinsic Safety	
Protection by enclosure	ta	
Encapsulation	ma	
Optical radiation, inherently safe	op is, with EPL Da #	Zone 20
Optical radiation, with interlock	op sh, with EPL Da #	
Special protection	sa	
EPL Da, with suitable type of protection †		
-		
Equipment Suitable for Use in Zone 20		
Equipment Suitable for Use in Class II, Division 1		
Intrinsic safety	ib	
Protection by enclosure	tb	Zone 21
Pressurized enclosure	p; px, pxb; py; pyb	
Encapsulation	mb	
Electrical resistance trace heating	60079-30-1, with EPL Db #	

Skin effect trace heating	IEEE 844.1, with EPL Db #	
Optical radiation, inherently safe	op is, with EPL Db #	
Optical radiation, with interlock	op sh, with EPL Db #	
Optical radiation, protected	op pr, with EPL Db #	
Special protection	sb	
EPL Db, with suitable type of protection ‡		
Equipment Suitable for Use in Zone 21		
Equipment Suitable for Use in Class II, Division 2		
Intrinsic safety	ic	
Protection by enclosure	tc	
Pressurized enclosure	pz; pzc	
Encapsulation	mc	
Electrical resistance trace heating	60079-30-1, with EPL Dc #	Zone 22
Skin effect trace heating	IEEE 844.1, with EPL Dc #	
Optical radiation, inherently safe	op is, with EPL Dc #	
Optical radiation, with interlock	op sh, with EPL Dc #	
Optical radiation, protected	op pr, with EPL Dc #	
Special protection	sc	
EPL Dc, with suitable type of protection ‡		

#: Equipment marked with these types of protection is available in multiple levels of protection that are not specifically identified within the Ex marking.

*Permitted to be installed in a hazardous (classified) location if suitably protected using another type of protection.

†The EPL takes precedence over the types of protection. For example, “op is Db” is suitable for Zone 21 (not Zone 20). “60079-30-1 Dc” is suitable for Zone 22 (not Zone 21). Selection according to the marked EPL is critical to the safe application of this equipment.

Informational Note: The “D” suffix on the type of protection designation was employed prior to the introduction of Group IIIA, IIIB, and IIIC, which is now used to distinguish between the type of protection employed for Group II (Gases) or Group III (Dusts).

Statement of Problem and Substantiation for Public Input

Under the NEC Division system, there is permission for Other Protection Techniques as described in 500.7(L). This permits the ability for new and innovative designs to be certified for Division 1 or 2 applications that are outside the Scope of other Division system Protection Techniques (e.g. Explosionproof, Intrinsic Safety, and Dust Ignitionproof).

While there is no such permission under the NEC Zone system, there is such permission under the IEC Zone system based on IEC 60079-33, Explosive atmospheres – Part 33: Equipment protection by special protection “s”. The U.S. is in the process of adopting IEC 60079-33 as ANSI/UL 60079-33 with National differences. This adoption is expected to be in place prior to the Second Draft Public Comment Closing Date.

The anticipated ANSI/UL 60079-33 (as with the existing IEC 60079-33) is only intended for equipment that is outside the Scope of other ANSI/UL 60079 series protection technique standards.

Also see PI Nos. 726, 727, 728 and 729.

Related Public Inputs for This Document

Related Input	Relationship
Public Input No. 726-NFPA 70-2020 [New Definition after Definition: Spray Room.]	
Public Input No. 727-NFPA 70-2020 [New Section after 505.8(N)]	
Public Input No. 728-NFPA 70-2020 [Section No. 505.9(C)(2)]	
Public Input No. 729-NFPA 70-2020 [New Section after 506.8(N)]	
Public Input No. 726-NFPA 70-2020 [New Definition after Definition: Spray Room.]	
Public Input No. 727-NFPA 70-2020 [New Section after 505.8(N)]	
Public Input No. 728-NFPA 70-2020 [Section No. 505.9(C)(2)]	
Public Input No. 729-NFPA 70-2020 [New Section after 506.8(N)]	

Submitter Information Verification

Submitter Full Name: Paul Kelly
Organization: UL LLC
Street Address:
City:
State:
Zip:
Submittal Date: Fri Mar 20 17:30:37 EDT 2020
Committee: NEC-P14

Committee Statement

Resolution: FR-8644-NFPA 70-2021
Statement: This action deletes Table 506.9(C)(2)(3) and revises the text in 506.9 (C)(2)(1) and (C)(2)(3) to reference new Table 13 in Chapter 9 created by the action on Public Input 2287.

Public Input No. 1979-NFPA 70-2020 [Section No. 506.9(E)(3)]

(3) Unused Openings.

All unused openings shall be closed with ~~listed metal~~ close-up plugs listed for the location and which shall maintain the type of protection . The close-up plug engagement shall comply with 506.9(E)(1) or (E)(2).

Exception: Equipment that is listed and supplied with close-up plugs as part of their listing shall be permitted to be used.

Statement of Problem and Substantiation for Public Input

Listed close-up plugs should be required to be listed for the location and maintain the type of protection. Listed equipment may employ close-up plugs that are not independently listed for either the location or the type of protection when evaluated as part as the equipment listing. “Listed for the location” will address the material requirements and therefore “metal” is not needed to be stated explicity in the Code.

Submitter Information Verification

Submitter Full Name: Megan Hayes
Organization: Nema
Street Address:
City:
State:
Zip:
Submittal Date: Wed Jul 22 15:24:11 EDT 2020
Committee: NEC-P14

Committee Statement

Resolution: FR-8646-NFPA 70-2021

Statement: The recommendation has been revised to make “close-up plug” the term “blanking element”. See the UL 60079-0 or UL 1203 for the definition of blanking element.

Public Input No. 4081-NFPA 70-2020 [Section No. 506.9(F)]

(F) Optical Fiber Cables.

An optical fiber cable, with or without current-carrying conductors (composite optical fiber cable), shall be installed to address the associated fire hazard and sealed to address the associated explosion hazard in accordance ~~with the requirements of~~ with 506.15 and 506.16.

Statement of Problem and Substantiation for Public Input

Deleting the words "the requirements of" does not change the meaning of the section.

Submitter Information Verification

Submitter Full Name: David Williams
Organization: Delta Charter Township
Street Address:
City:
State:
Zip:
Submittal Date: Wed Sep 09 20:19:55 EDT 2020
Committee: NEC-P14

Committee Statement

Resolution: FR-8647-NFPA 70-2021
Statement: The revision provides compliance with the intent of the NEC Style Manual for requirements to be succinctly written.

Public Input No. 422-NFPA 70-2020 [Section No. 506.9(F)]

(F) Optical Fiber Cables.

An optical fiber cable, with or without current-carrying conductors (~~composite~~ hybrid optical fiber cable), shall be installed to address the associated fire hazard and sealed to address the associated explosion hazard in accordance with the requirements of 506.15 and 506.16.

Statement of Problem and Substantiation for Public Input

Public Input No. 416 proposes to change “composite optical fiber cable” to “hybrid optical fiber cable” in order to align the NEC with current U.S and international definitions. Acceptance of PI 416 necessitates changing “composite optical fiber cable” to “hybrid optical fiber cable” throughout the NEC. This is a coordinating Public Input to PI 416.

Related Public Inputs for This Document

Related Input	Relationship
Public Input No. 416-NFPA 70-2020 [Definition: Cable, Optical Fiber, Composite.]	Changes definition of composite optical fiber cable to hybrid optical fiber cable
Public Input No. 417-NFPA 70-2020 [Section No. 770.3(C)]	Coordinates with the change of composite optical fiber cable to hybrid optical fiber cable in PI 416
Public Input No. 418-NFPA 70-2020 [Section No. 770.133(B)]	Coordinates with the change of composite optical fiber cable to hybrid optical fiber cable in PI 416
Public Input No. 419-NFPA 70-2020 [Section No. 830.1]	Coordinates with the change of composite optical fiber cable to hybrid optical fiber cable in PI 416
Public Input No. 420-NFPA 70-2020 [Section No. 500.8(F)]	Coordinates with the change of composite optical fiber cable to hybrid optical fiber cable in PI 416
Public Input No. 421-NFPA 70-2020 [Section No. 505.9(F)]	Coordinates with the change of composite optical fiber cable to hybrid optical fiber cable in PI 416
Public Input No. 423-NFPA 70-2020 [Section No. 640.21(B)]	Coordinates with the change of composite optical fiber cable to hybrid optical fiber cable in PI 416
Public Input No. 424-NFPA 70-2020 [Section No. 640.21(C)]	Coordinates with the change of composite optical fiber cable to hybrid optical fiber cable in PI 416
Public Input No. 425-NFPA 70-2020 [Section No. 640.42(B)]	Coordinates with the change of composite optical fiber cable to hybrid optical fiber cable in PI 416
Public Input No. 426-NFPA 70-2020 [Section No. 640.42(C)]	Coordinates with the change of composite optical fiber cable to hybrid optical fiber cable in PI 416
Public Input No. 416-NFPA 70-2020 [Definition: Cable, Optical Fiber, Composite.]	
Public Input No. 417-NFPA 70-2020 [Section No. 770.3(C)]	
Public Input No. 418-NFPA 70-2020 [Section No. 770.133(B)]	
Public Input No. 419-NFPA 70-2020 [Section No. 830.1]	

Public Input No. 420-NFPA 70-2020 [Section No. 500.8(F)]

Public Input No. 421-NFPA 70-2020 [Section No. 505.9(F)]

Public Input No. 423-NFPA 70-2020 [Section No. 640.21(B)]

Public Input No. 424-NFPA 70-2020 [Section No. 640.21(C)]

Public Input No. 425-NFPA 70-2020 [Section No. 640.42(B)]

Public Input No. 426-NFPA 70-2020 [Section No. 640.42(C)]

Submitter Information Verification

Submitter Full Name: Stanley Kaufman
Organization: CableSafe, Inc./OFS
Affiliation: Insulated Cable Engineers Association (ICEA)
Street Address:
City:
State:
Zip:
Submittal Date: Tue Feb 04 13:07:45 EST 2020
Committee: NEC-P14

Committee Statement

Resolution: CMP-14 agrees with the recommendation but this terminology change first has to be addressed by CMP-16.

Public Input No. 2508-NFPA 70-2020 [Section No. 506.15(A)]

(A) Zone 20.

In Zone 20 locations, the following wiring methods shall be permitted:

(1) Threaded rigid metal conduit (Type RMC) or threaded steel intermediate metal conduit (Type IMC).

(2) Type MI cable terminated with fittings listed for the location. Type MI cable shall be installed and supported in a manner to avoid tensile stress at the termination fittings.

Exception No. 1: Type MI cable and fittings listed for Class II, Division 1 locations shall be permitted to be used.

Exception No. 2: Equipment identified as intrinsically safe "ia" shall be permitted to be connected using the wiring methods identified in 504.20.

(3) In industrial establishments ~~with limited public access, where the conditions of maintenance and supervision ensure that only qualified persons service the installation,~~ Type MC-HL cable listed for use in Zone 20 locations, with a continuous corrugated metallic sheath, an overall jacket of suitable polymeric material, and a separate equipment grounding conductor(s) in accordance with 250.122, and terminated with fittings listed for the application, shall be permitted. Type MC-HL cable shall be installed in accordance with Part II of Article 330.

Exception: Type MC-HL cable and fittings listed for Class II, Division 1 locations shall be permitted to be used.

(4) In industrial establishments ~~with restricted public access, where the conditions of maintenance~~ and ~~supervision ensure that only qualified persons service the installation, and~~ where the cable is not subject to physical damage, Type ITC-HL cable listed for use in Zone 1 or Class I, Division 1 locations, with a gas/vaportight continuous corrugated metallic sheath and an overall jacket of suitable polymeric material, and terminated with fittings listed for the application. Type ITC-HL cable shall be installed in accordance with 727.4.

(5) Fittings and boxes shall be identified for use in Zone 20 locations.

Exception: Boxes and fittings listed for Class II, Division 1 locations shall be permitted to be used.

(6) Where necessary to employ flexible connections, liquidtight flexible metal conduit (Type LFMC) with listed fittings, liquidtight flexible nonmetallic conduit (Type LFNC) with listed fittings, or flexible cord listed for extra-hard usage and provided with listed fittings shall be used. Where flexible cords are used, they shall also comply with 506.17 and shall be terminated with a listed cord connector that maintains the type of protection of the terminal compartment. Where flexible connections are subject to oil or other corrosive conditions, the insulation of the conductors shall be of a type listed for the condition or shall be protected by means of a suitable sheath.

Exception No. 1: Liquidtight flexible conduit (Type LFMC or LFNC), flexible conduit fittings, and cord fittings listed for Class II, Division 1 locations shall be permitted.

Exception No. 2: For elevator use, an identified elevator cable of Type EO, ETP, or ETT, shown under the "use" column in Table 400.4 for "hazardous (classified) locations," and terminated with listed connectors that maintain the type of protection of the terminal compartment shall be permitted.

Informational Note No. 1: See 506.25 for grounding requirements where flexible conduit is used.

Informational Note No. 2: For further information on construction, testing, and marking of cables, cable fittings, and cord connectors, see ANSI/UL 2225-2013, *Cables and Cable-Fittings for Use in Hazardous (Classified) Locations* .

(7) Optical fiber cable Types OFNP, OFCP, OFNR, OFCR, OFNG, OFCG, OFN, and OFC shall be permitted to be installed in raceways in accordance with 506.15(A). Optical fiber cables shall be sealed in accordance with 506.16.

Statement of Problem and Substantiation for Public Input

The term industrial establishment is used throughout Articles 500 through 506. Where the term is used the following text is added: "restricted access where the conditions of maintenance and engineering supervision ensure that only qualified persons install and service the installation. By creating a definition, the added text can be removed from each location where the term appears. This will remove clutter from the section or subdivision where the term appears which will improve readability.

The proposed definition adds the requirement for the AHJ to approve the building for industrial use. This will help to add some consistency to the use of the less restrictive requirements for industrial establishments.

Related Public Inputs for This Document

Related Input	Relationship
Public Input No. 2494-NFPA 70-2020 [New Definition after Definition: Inherently Safe Optical Ra...]	

Submitter Information Verification

Submitter Full Name: John Simmons
Organization: Florida East Coast JATC
Street Address:
City:
State:
Zip:
Submittal Date: Sun Aug 23 17:00:05 EDT 2020
Committee: NEC-P14

Committee Statement

Resolution: The recommendation is predicated on the inclusion of a new definition of Industrial Establishments in Article 100. This requires action by CMP-1 during the First Draft phase of the revision process. If accepted, comments will be submitted for action during the Second Draft phase of the revision process.

Public Input No. 1980-NFPA 70-2020 [Section No. 506.15(C)]

(C) Zone 22.

In Zone 22 locations, the following wiring methods shall be permitted:

(1) All wiring methods permitted in 506.15(B).

(2) Rigid metal conduit (Type RMC) or intermediate metal conduit (Type IMC) with listed threaded or threadless fittings.

(3) Electrical metallic tubing (Type EMT) or dusttight wireways.

(4) Type MC or MI cable with listed termination fittings.

(5) Type PLTC or PLTC-ER cable in accordance with Part II or III of Article 725, including installation in cable tray systems. The cable shall be terminated with listed fittings. Type PLTC-ER cable shall include an equipment grounding conductor in addition to a drain wire that might be present.

(6) Type ITC or ITC-ER cable as permitted in 727.4 and terminated with listed fittings. Type ITC-ER cable shall include an equipment grounding conductor in addition to a drain wire.

(7) Type MV, TC, or TC-ER cable, including installation in cable tray systems. Type TC-ER cable shall include an equipment grounding conductor in addition to a drain wire that might be present. The cable shall be terminated with listed fittings.

(8) Intrinsic safety type of protection “ic” shall be permitted using any of the wiring methods permitted for unclassified locations. Intrinsic safety type of protection “ic” systems shall be installed in accordance with the control drawing(s). Simple apparatus, not shown on the control drawing, shall be permitted in a circuit of intrinsic safety type of protection “ic”, provided that the simple apparatus does not interconnect the intrinsic safety type of protection “ic” circuit to any other circuit. Separation of circuits of intrinsic safety type of protection “ic” shall be in accordance with one of the following:

(9) Be in separate cables

(10) Be in multiconductor cables where the conductors of each circuit are within a grounded metal shield

(11) Be in multiconductor cables where the conductors have insulation with a minimum thickness of 0.25 mm (0.01 in.)

Informational Note: The term *simple apparatus* is defined in Part III of Article 100.

(12) Boxes and fittings shall be dusttight.

(13) Optical fiber cable Types OFNP, OFCP, OFNR, OFCR, OFNG, OFCG, OFN, and OFC shall be permitted to be installed in cable trays or any raceway in accordance with 506.15(C). Optical fiber cables shall be sealed in accordance with 506.16.

(14) Cablebus.

(15) Type P Cable

Statement of Problem and Substantiation for Public Input

Type P cable is permissible for use in Class II, Division 2 locations for general wiring. Should also be permitted for Zone 22 locations.

Submitter Information Verification

Submitter Full Name: Megan Hayes
Organization: Nema
Street Address:
City:
State:
Zip:
Submittal Date: Wed Jul 22 15:29:50 EDT 2020
Committee: NEC-P14

Committee Statement

Resolution: The recommendation is predicated on the inclusion of a new definition of Industrial Establishments in Article 100. This requires action by CMP-1 during the First Draft phase of the revision process. If accepted, comments will be submitted for action during the Second Draft phase of the revision process.

Public Input No. 2131-NFPA 70-2020 [Section No. 506.25]

506.25 Grounding and Bonding.

~~Regardless of the voltage of the electrical system, grounding and bonding shall comply with Article 250 and the requirements in 506.25(A) and (B).~~

~~**(A)** Bonding.~~

~~The locknut-bushing and double-locknut types of contacts shall not be depended on for bonding purposes, but bonding jumpers with proper fittings or other approved means of bonding shall be used. Such means of bonding shall apply to all intervening raceways, fittings, boxes, enclosures, and so forth, between Zone 20, Zone 21, and Zone 22 locations and the point of grounding for service equipment or point of grounding of a separately derived system.~~

~~*Exception: The specific bonding means shall be required only to the nearest point where the grounded circuit conductor and the grounding electrode conductor are connected together on the line side of the building or structure disconnecting means as specified in 250.32(B) if the branch side overcurrent protection is located on the load side of the disconnecting means.*~~

~~**(B)** Types of Equipment Grounding Conductors.~~

~~Liquidtight flexible metal conduit shall include an equipment bonding jumper of the wire type in compliance with 250.102.~~

~~*Exception: In Zone 22 locations, the bonding jumper shall be permitted to be deleted where all of the following conditions are met:*~~

~~*(1) Listed liquidtight flexible metal conduit 1.8 m (6 ft) or less in length, with fittings listed for grounding, is used.*~~

~~*(2) Overcurrent protection in the circuit is limited to 10 amperes or less.*~~

~~*(3) The load is not a power utilization load.*~~

All electrical equipment in Zone 20, 21, and 22 hazardous locations shall be grounded and bonded as required in Article 250.

Informational Note: See 250.100 for specific grounding and bonding requirements for hazardous (classified) locations.

Statement of Problem and Substantiation for Public Input

This is a companion proposal to on one being submitted to revise 250.100.

Related Public Inputs for This Document

Related Input	Relationship
Public Input No. 2120-NFPA 70-2020 [Article 100]	
Public Input No. 2129-NFPA 70-2020 [Section No. 348.60]	
Public Input No. 2124-NFPA 70-2020 [Section No. 501.30]	
Public Input No. 2130-NFPA 70-2020 [Section No. 350.60]	
Public Input No. 2125-NFPA 70-2020 [Section No. 502.30]	
Public Input No. 2126-NFPA 70-2020 [Section No. 503.30]	
Public Input No. 2127-NFPA 70-2020 [Section No. 505.25]	

Public Input No. 2132-NFPA 70-2020 [Section No. 250.118]

Submitter Information Verification

Submitter Full Name: Paul Guidry
Organization: Fluor Enterprises, Inc.
Affiliation: Associated Builders and Contractors
Street Address:
City:
State:
Zip:
Submittal Date: Sun Aug 02 12:41:13 EDT 2020
Committee: NEC-P14

Committee Statement

Resolution: A first revision has been developed to revise the entire section. The language concerning the locknut/bushing and double locknut connections remains in the first revision. The intent of requiring bonding jumpers is to reduce the chance of arcing which may occur with mechanical devices (locknuts and bushings) which may loosen. The proposed listing requirement is unnecessary as Article 250 provides the listing requirements for grounding and bonding devices. The proposed addition of the term equipment grounding conductor in (B) does not meet the intent of the subdivision. An equipment bonding jumper connects two parts of the equipment grounding system. Liquidtight is approved in Class II, Divisions 1 and 2 only where flexibility is needed. The bonding jumper ensures integrity of the grounding path.

Public Input No. 2597-NFPA 70-2020 [Section No. 506.25]

506.~~25~~ 25 Grounding and Bonding. Zone 20, Zone 21, and Zone 22.

Regardless of the voltage of the electrical system, ~~grounding and bonding~~ wiring and equipment in Zone 20, Zone 21, and Zone 22 locations shall comply with ~~Article 250 and~~ the requirements ~~in~~ of 506.25(A) and 506.25 (B).

(A) Grounding

Wiring and equipment in Zone 20, Zone 21, and Zone 22 shall be grounded as required in Article 250.

(B) Bonding.

The locknut-bushing and double-locknut types of contacts shall not be depended on for bonding purposes, but bonding jumpers with proper fittings or other approved means of bonding shall be used. Such means of bonding shall apply to all intervening raceways, fittings, boxes, enclosures, and ~~so forth~~ other parts of the raceway systems , between the Zone 20, Zone 21, and Zone 22 ~~locations and~~ locations and the point of grounding for service equipment or point of grounding of a separately derived system.

Exception: The specific bonding means shall be required only to the nearest point where the grounded circuit conductor and the grounding electrode conductor are connected together on the line side of the building or structure disconnecting means as specified in 250.32(B) if the branch side overcurrent protection is located on the load side of the disconnecting means.

~~**(B)** Types of Equipment Grounding Conductors.~~

Liquidtight flexible metal conduit shall include an equipment bonding jumper of the wire type in compliance with 250.102 .

Exception: In Zone 22 locations, the bonding jumper shall be permitted to be deleted where all of the following conditions are met:

(1) Listed liquidtight flexible metal conduit 1.8 m (6 ft) or less in length, with fittings listed for grounding, is used.

(2) Overcurrent protection in the circuit is limited to 10 amperes or less.

(3) The load is not a power utilization load.

Statement of Problem and Substantiation for Public Input

Section 506.25 provides requirements for grounding and bonding. There is only one requirement for grounding, and it is to comply with Article 250. All the other requirements in the section apply to bonding, however the current text has a bonding requirement under subdivision (B) which is titled "types of equipment grounding conductors". The subdivisions addresses an equipment bonding jumper and refers to 250.102 which does not apply to equipment grounding conductors. A major part of this proposal reorganizes the section and places the grounding requirement in subdivision (A) Grounding, and the bonding requirements in subdivision (B) Bonding. The proposal changed the word "approved" in the phrase "or other approved means" to "identified". The word approved places the responsibility of deciding the suitability of a product on the authority having jurisdiction which in some cases may lead to inconsistency. The term identified provides the AHJ with some guidance in deciding the suitability of the bonding means. Also, the phrase "so forth" is changed to "other parts of raceway systems". The phrase so forth is ambiguous. The revised wording would add clarity. The term Class I is removed to be consistent with the Zone class designations.

Related Public Inputs for This Document

Related Input	Relationship
Public Input No. 1923-NFPA 70-2020 [Section No. 501.30]	
Public Input No. 1925-NFPA 70-2020 [Section No. 502.30]	
Public Input No. 1981-NFPA 70-2020 [Section No. 503.30]	
Public Input No. 2602-NFPA 70-2020 [Section No. 502.30]	
Public Input No. 2604-NFPA 70-2020 [Section No. 503.30]	
Public Input No. 2606-NFPA 70-2020 [Section No. 501.30]	

Submitter Information Verification

Submitter Full Name: John Simmons
Organization: Florida East Coast JATC
Street Address:
City:
State:
Zip:
Submittal Date: Tue Aug 25 14:34:08 EDT 2020
Committee: NEC-P14

Committee Statement

Resolution: FR-8404-NFPA 70-2021

Statement: The section number has been revised for consistency throughout the hazardous (classified) location articles. Section 4.1.4 of the 2020 NEC Style Manual prohibits references to an entire article, with the exception of Article 100. As such, the corresponding language in this section is revised to refer to Parts V and VI of Article 250 in compliance with the Style Manual, without changing the intent of the section. The exceptions have been revised to positive text as directed by the Style Manual. In addition, the section is updated to require “bonding and grounding” to meet the intent of the Article 250 requirements. The words “in accordance with the requirements of” do not add to the charging language and are deleted for brevity. The committee is deleting “and so forth” and adding cable trays into this section to make it clear that cable trays must be bonded in the same manner as raceways. The code panel is removing the word “intervening” because it is unnecessary but adding “metal” so it’s clear that this requirement does not apply to nonmetallic raceways or cable trays. The requirement for metal struts, angles, or channels is added to make it clear when they are used for type TC-ER, PLTC-ER, or ITC-ER cables, they must be bonded accordingly. Finally, “Power Utilization Load” is currently not defined and in the interest of usability, the code making panel is clarifying the intent by stating in which circuits flexible liquidtight metal conduit is not required to have an additional internal equipment bonding jumper.

Public Input No. 1709-NFPA 70-2020 [Article 510]

~~**Article 510** Hazardous (Classified) Locations — Specific~~

~~**510.1** Scope.~~

~~Articles 511 through 517 cover occupancies or parts of occupancies that are or may be hazardous because of atmospheric concentrations of flammable liquids, gases, or vapors, or because of deposits or accumulations of materials that may be readily ignitible.~~

~~**510.2** General.~~

~~The general rules of this *Code* and the provisions of Articles 500 through 504 shall apply to electrical wiring and equipment in occupancies within the scope of Articles 511 through 517, except as such rules are modified in Articles 511 through 517. Where unusual conditions exist in a specific occupancy, the authority having jurisdiction shall judge with respect to the application of specific rules.~~

Statement of Problem and Substantiation for Public Input

Article 510 serves no useful purpose. All it does is point to other articles. There is no place else in the code where this is done. Articles 511 through 517 exist adequately on their own without this article pointing to them. Over the years, Chapter 5 has grown to recognize the IEC classifications and methods with the creation of Articles 504, 505, and 506, which completes the general hazardous locations requirements. It has been many years since a new hazardous locations occupancy specific article was created, despite the fact that NFPA has several occupancy specific standards. Deleting Article 510 would create space for a new article (along with Article 512), if needed in the future.

Submitter Information Verification

Submitter Full Name: Mark Earley
Organization: Alumni Code Consulting Group, LLC
Street Address:
City:
State:
Zip:
Submittal Date: Thu Jun 25 14:29:29 EDT 2020
Committee: NEC-P14

Committee Statement

Resolution: FR-8305-NFPA 70-2021

Statement: Article 510 has been deleted, however the necessary text has been added to Articles 511-516 to ensure compliance with Articles 500, 505 and 506. Article 517 is under the purview of CMP-15 and they will have to create a separate action for that article. It is also noted that there is a reference to Article 510 in Table 225.3 that is under the purview of CMP-10.

Public Input No. 1767-NFPA 70-2020 [Article 510]

~~**Article 510** Hazardous (Classified) Locations — Specific~~

~~**510.1** Scope.~~

~~Articles 511 through 517 cover occupancies or parts of occupancies that are or may be hazardous because of atmospheric concentrations of flammable liquids, gases, or vapors, or because of deposits or accumulations of materials that may be readily ignitible.~~

~~**510.2** General.~~

~~The general rules of this *Code* and the provisions of Articles 500 through 504 shall apply to electrical wiring and equipment in occupancies within the scope of Articles 511 through 517, except as such rules are modified in Articles 511 through 517. Where unusual conditions exist in a specific occupancy, the authority having jurisdiction shall judge with respect to the application of specific rules.~~

Statement of Problem and Substantiation for Public Input

This Article is redundant information and is unnecessary. How the Code is arranged and is supposed to be applied is adequately covered in Section 90.3 which applies to the entire NEC. This article is also is outdated and has not been kept current. For example, Articles 505 and 506 are not included here, but are part of chapter 5 hazardous (classified) locations articles. The NEC is not impacted in any way by deleting this article. As an option, text could be added to 90.3, but after looking at this closer, it is unecessary.

Submitter Information Verification

Submitter Full Name: Agnieszka Golriz
Organization: NECA
Street Address:
City:
State:
Zip:
Submittal Date: Tue Jun 30 07:53:32 EDT 2020
Committee: NEC-P14

Committee Statement

Resolution: FR-8305-NFPA 70-2021

Statement: Article 510 has been deleted, however the necessary text has been added to Articles 511-516 to ensure compliance with Articles 500, 505 and 506. Article 517 is under the purview of CMP-15 and they will have to create a separate action for that article. It is also noted that there is a reference to Article 510 in Table 225.3 that is under the purview of CMP-10.

Public Input No. 4488-NFPA 70-2020 [Section No. 510.1]

510.1 Scope.

~~Articles 511 through 517 cover occupancies~~ This article covers the general requirements for the occupancy specific hazardous locations or parts of occupancies involving hazardous locations that are or may be hazardous because of atmospheric concentrations of flammable liquids, gases, or vapors, or because of deposits or accumulations of materials that may be readily ignitible.

Statement of Problem and Substantiation for Public Input

Section 4.1.4 of the 2020 NEC(r) Style Manual prohibits references to the entire articles, with the exception of Article 100. I've taken a stab at modifying this language but encourage the CMP to carefully review for potential upgrades for usability of the Code.

Submitter Information Verification

Submitter Full Name: Richard Holub
Organization: The DuPont Company, Inc.
Street Address:
City:
State:
Zip:
Submittal Date: Thu Sep 10 14:03:04 EDT 2020
Committee: NEC-P14

Committee Statement

Resolution: Article 510 has been deleted based on the action taken on Public Inputs 1709 and 1767.

Public Input No. 1956-NFPA 70-2020 [Section No. 510.2]

510.2 General.

The general rules of this *Code* and the provisions of Articles 500 through ~~504 shall~~ 506 shall apply to electrical wiring and equipment in occupancies within the scope of Articles 511 through 517, except as such rules are modified in Articles 511 through 517. Where unusual conditions exist in a specific occupancy, the authority having jurisdiction shall judge with respect to the application of specific rules.

Statement of Problem and Substantiation for Public Input

Article 510 references Specific Articles that address the Division and Zone Systems, but the "General" text only addresses Articles 500 - 504 on the Division System. This proposed revision will expand the "General" text to address both the Division and Zone Systems.

Submitter Information Verification

Submitter Full Name: Paul Kelly
Organization: UL LLC
Street Address:
City:
State:
Zip:
Submittal Date: Tue Jul 21 18:55:53 EDT 2020
Committee: NEC-P14

Committee Statement

Resolution: Article 510 has been deleted based on the action taken on Public Inputs 1709 and 1767.

Public Input No. 4183-NFPA 70-2020 [Section No. 510.2]

510.2 General.

The general rules of this *Code* and the provisions of Articles 500 through 504, or 505 and 506, shall apply to electrical wiring and equipment in occupancies within the scope of Articles 511 through 517, except as such rules are modified in Articles 511 through 517. Where unusual conditions exist in a specific occupancy, the authority having jurisdiction shall judge with respect to the application of specific rules.

Statement of Problem and Substantiation for Public Input

The articles covering hazardous occupancies are now fully correlated with zone classifications, Article 510 should accord Articles 505 and 506 a mention in this location, that provides what is in effect an overarching scope to the articles covering occupancies with routine hazardous (classified) locations.

Submitter Information Verification

Submitter Full Name: Frederic Hartwell
Organization: Hartwell Electrical Services, Inc.
Affiliation: self
Street Address:
City:
State:
Zip:
Submittal Date: Thu Sep 10 00:20:10 EDT 2020
Committee: NEC-P14

Committee Statement

Resolution: Article 510 has been deleted based on the action taken on Public Inputs 1709 and 1767.

Public Input No. 4491-NFPA 70-2020 [Section No. 510.2]

510.2 General.

The general rules of this *Code* and the provisions of Articles 500 through ~~504~~ - 506 shall apply to electrical wiring and equipment in occupancies within the scope of Articles 511 through 517, except as such rules are modified in Articles 511 through 517. Where unusual conditions exist in a specific occupancy, the authority having jurisdiction shall judge with respect to the application of specific rules.

Statement of Problem and Substantiation for Public Input

Section 4.1.4 of the NEC(r) Style Manual prohibits reference to an entire article with the exception of Article 100. It is not clear to me how to address this in the language of this section but I would note that the panel has failed to include the Zone related hazardous (classified) location articles in this text and have recommended changes to include them. I encourage the CMP to carefully review to see if there is another way to state these requirements and comply with the Style Manual section noted.

Submitter Information Verification

Submitter Full Name: Richard Holub
Organization: The DuPont Company, Inc.
Street Address:
City:
State:
Zip:
Submittal Date: Thu Sep 10 14:09:02 EDT 2020
Committee: NEC-P14

Committee Statement

Resolution: Article 510 has been deleted based on the action taken on Public Inputs 1709 and 1767.

Public Input No. 909-NFPA 70-2020 [Section No. 511.1]

511.1 Scope.

These occupancies shall include locations used for service and repair operations in connection with self-propelled vehicles (including, but not limited to, passenger automobiles, buses, trucks, and tractors) in which volatile flammable liquids or flammable gases are used for fuel or power.

Informational Note: Text that is followed by a reference in brackets has been extracted from NFPA 30A-2018, *Code for Motor Fuel Dispensing Facilities and Repair Garages*. Only editorial changes were made to the extracted text to make it consistent with this *Code*.

Statement of Problem and Substantiation for Public Input

My public input is to change the title of Article 511 from "Commercial Garages, Repair and Storage" to "Commercial Repair and Storage Garages." Attempting that through Terraview is a bit easier said than done. My substantiation is that the existing title is written like an index, not as a title. It reads like Yoda wrote it.

Submitter Information Verification

Submitter Full Name: Ryan Jackson
Organization: Ryan Jackson
Street Address:
City:
State:
Zip:
Submittal Date: Mon Apr 27 17:47:05 EDT 2020
Committee: NEC-P14

Committee Statement

Resolution: As written, the title makes it clear that the Article applies only to commercial garages used for repair and storage. The proposed text may be interpreted to apply to any storage garage.

Public Input No. 340-NFPA 70-2020 [Section No. 511.3(C)]

(C) Repair Garages, Major and Minor.

Where vehicles using Class I liquids or heavier-than-air gaseous fuels (such as LPG) are repaired, hazardous area classification guidance is found in Table 511.3(C).

Informational Note: For additional information, see NFPA 30A-2018, *Code for Motor Fuel Dispensing Facilities and Repair Garages*, Table 8.3.2.

Table 511.3(C) Extent of Classified Locations for Major and Minor Repair Garages with Heavier-Than-Air Fuel

Location	Class I		Extent of Classified Location	
	Division (Group D)	Zone (Group IIA)		
Repair garage, major (where Class I liquids or gaseous fuels are transferred or dispensed*)	1	1	Entire space within any pit, belowgrade work area, or subfloor work area that is not ventilated	
	2	2	Entire space within any pit, belowgrade work area, or subfloor work area that is provided with ventilation of at least 0.3 $m^3/min/m^2$ (1 $ft^3/min/ft^2$) of floor area, with suction taken from a point within 300 mm (12 in.) of floor level	
	-	2	2	Up to 450 mm (18 in.) above floor level of the room, except as noted below, for entire floor area
	-	Unclassified	Unclassified	Up to 450 mm (18 in.) above floor level of the room where room is provided with ventilation of at least 0.3 $m^3/min/m^2$ (1 $ft^3/min/ft^2$) of floor area, with suction taken from a point within 300 mm (12 in.) of floor level
	-	2	2	Within 0.9 m (3 ft) of any fill or dispensing point, extending in all directions
Specific areas adjacent to classified locations	Unclassified	Unclassified	Areas adjacent to classified locations where flammable vapors are not likely to be released, such as stock rooms, switchboard rooms, and other similar locations, where mechanically ventilated at a rate of four or more air changes per hour or designed with positive air	

Location	Class I Division (Group D)	Class I Zone (Group IIA)	Extent of Classified Location	
			pressure or where effectively ~~cut off~~ separated by walls or partitions	
Repair garage, minor (where Class I liquids or gaseous fuels are not transferred or dispensed*)	2	2	Entire space within any pit, belowgrade work area, or subfloor work area that is not ventilated	
	-	2	2	Up to 450 mm (18 in.) above floor level, extending 0.9 m (3 ft) horizontally in all directions from opening to any pit, belowgrade work area, or subfloor work area that is not ventilated
	-	Unclassified	Unclassified	Entire space within any pit, belowgrade work area, or subfloor work area that is provided with ventilation of at least 0.3 $m^3/min/m^2$ (1 $ft^3/min/ft^2$) of floor area, with suction taken from a point within 300 mm (12 in.) of floor level
Specific areas adjacent to classified locations	Unclassified	Unclassified	Areas adjacent to classified locations where flammable vapors are not likely to be released, such as stock rooms, switchboard rooms, and other similar locations, where mechanically ventilated at a rate of four or more air changes per hour or designed with positive air pressure, or where effectively ~~cut off~~ separated by walls or partitions	

*Includes draining of Class I liquids from vehicles.

Additional Proposed Changes

File Name	Description	Approved

2020_FR_8199_replaces_cut_off_with_disconnect_in_service_equip_definition.docx 2020 FR 8199

Statement of Problem and Substantiation for Public Input

This PI requests that the term "cut off" be replaced with "separated" which more accurately describes the condition.

The following link provides a definition of "separate": https://www.merriam-webster.com/dictionary/separate

Definition of separate:
transitive verb
1a: to set or keep apart
b: to make a distinction between
2archaic : to set aside for a special purpose
3: to part by a legal separation:
4: to block off
5a: to isolate from a mixture
b: to divide into constituent parts
intransitive verb
1: to become divided or detached
adjective
1a: set or kept apart
2a: not shared with another
3a: existing by itself

"Cut off" is a vague term. The NEC Style Manual states:

Paragraph 1.3 Regulatory Adoption
Because the NEC is intended to be suitable for adoption as a regulatory document, it is important that it contain clearly stated mandatory requirements in the Code text.

Paragraph 3.2.1 Unenforceable Terms
The NEC shall not contain references or requirements that are unenforceable or vague.

Paragraph 3.3.4 Word Clarity
Words and terms used in the NEC shall be specific and clear in meaning, and shall avoid jargon, trade terminology, industry specific terms, or colloquial language that is difficult to understand.

Also note that in the 2020 NEC revision cycle CMP 10 replaced the term "cut off" in the definition of service equipment. That action was taken in FR 8199 which is attached for reference.

Companion PI's submitted to correlate this proposed change are 329, 346, 347 and 348

Related Public Inputs for This Document

Related Input	Relationship
Public Input No. 329-NFPA 70-2020 [Section No. 513.3(D)]	
Public Input No. 346-NFPA 70-2020 [Section No. 511.3(D)]	
Public Input No. 347-NFPA 70-2020 [Section No. 511.3(E)(1)]	
Public Input No. 348-NFPA 70-2020 [Section No. 513.3(B)]	
Public Input No. 329-NFPA 70-2020 [Section No. 513.3(D)]	
Public Input No. 346-NFPA 70-2020 [Section No. 511.3(D)]	

Public Input No. 347-NFPA 70-2020 [Section No. 511.3(E)(1)]
Public Input No. 348-NFPA 70-2020 [Section No. 513.3(B)]

Submitter Information Verification

Submitter Full Name: Vincent Della Croce
Organization:
Street Address:
City:
State:
Zip:
Submittal Date: Wed Jan 22 15:21:56 EST 2020
Committee: NEC-P14

Committee Statement

Resolution: FR-8694-NFPA 70-2021
Statement: The words ‘cut off’ have been replaced by ‘separated’ for clarity. The words “guidance found in” have been replaced by “shall be in accordance with” as this is a prescriptive requirement. The term “belowgrade” has been revised to “below grade” in the table.

First Revision No. 8199-NFPA 70-2018 [Definition: Service Equipment.]

Service Equipment.

The necessary equipment, ~~usually~~ consisting of a circuit breaker(s) or switch(es) and fuse(s) and their accessories, connected to the ~~load end of service conductors to a building or other structure, or an otherwise designated area,~~utility electric system and intended to constitute the main control and ~~cutoff~~disconnect of the ~~supply~~utility electric system. (~~CMP-4~~CMP-10)

Submitter Information Verification

Submitter Full Name: NEC-CMP Panel 10

Committee:

Submittal Date: Mon Jan 15 12:48:37 EST 2018

Committee Statement

Committee Statement: This revision clarifies that "service equipment" connects to the utility electric system which may be service conductors or a service lateral. The word "usually" is deleted because service equipment always consists of a circuit breaker(s) or switch(es) and fuse(s). The word "cutoff" is deleted and replaced with "disconnect" for clarity.

Response Message: FR-8199-NFPA 70-2018

Public Input No. 311-NFPA 70-2017 [Definition: Service Equipment.]
Public Input No. 3308-NFPA 70-2017 [Definition: Service Equipment.]

Ballot Results

This item has passed ballot

x

12 Eligible Voters

0 Not Returned

12 Affirmative All

0 Affirmative with Comments

0 Negative with Comments

0 Abstention

X

Affirmative All

Barnhart, Paul D.
Blizard, Scott A.
Burns, Julian R.
Carter, Charles Robert
Dollard, Jr., James T.

Fredericks, Carl
Koepke, Ed
Rempe, Kenneth J.
Saporita, Vincent J.
Townsend, Steven E.
Vance, Christopher R.
Williams, David A.

Public Input No. 3756-NFPA 70-2020 [Section No. 511.3(C)]

(C) Repair Garages, Major and Minor.

Where vehicles using Class I liquids or heavier-than-air gaseous fuels (such as LPG) are repaired, hazardous area classification ~~guidance is found in~~ shall be in accordance with Table 511.3(C).

Informational Note: For additional information, see NFPA 30A-2018, *Code for Motor Fuel Dispensing Facilities and Repair Garages*, Table 8.3.2.

Table 511.3(C) Extent of Classified Locations for Major and Minor Repair Garages with Heavier-Than-Air Fuel

Location	Class I		Extent of Classified Location	
	Division (Group D)	Zone (Group IIA)		
Repair garage, major (where Class I liquids or gaseous fuels are transferred or dispensed*)	1	1	Entire space within any pit, belowgrade work area, or subfloor work area that is not ventilated	
	2	2	Entire space within any pit, belowgrade work area, or subfloor work area that is provided with ventilation of at least 0.3 $m^3/min/m^2$ (1 $ft^3/min/ft^2$) of floor area, with suction taken from a point within 300 mm (12 in.) of floor level	
	-	2	2	Up to 450 mm (18 in.) above floor level of the room, except as noted below, for entire floor area
	-	Unclassified	Unclassified	Up to 450 mm (18 in.) above floor level of the room where room is provided with ventilation of at least 0.3 $m^3/min/m^2$ (1 $ft^3/min/ft^2$) of floor area, with suction taken from a point within 300 mm (12 in.) of floor level
	-	2	2	Within 0.9 m (3 ft) of any fill or dispensing point, extending in all directions
Specific areas adjacent to classified locations	Unclassified	Unclassified	Areas adjacent to classified locations where flammable vapors are not likely to be released, such as stock rooms, switchboard rooms, and other similar locations, where mechanically ventilated at a rate of four or more air changes per hour or	

Location	Class I Division (Group D)	Class I Zone (Group IIA)	Extent of Classified Location	
			designed with positive air pressure or where effectively cut off by walls or partitions	
Repair garage, minor (where Class I liquids or gaseous fuels are not transferred or dispensed*)	2	2	Entire space within any pit, belowgrade work area, or subfloor work area that is not ventilated	
	-	2	2	Up to 450 mm (18 in.) above floor level, extending 0.9 m (3 ft) horizontally in all directions from opening to any pit, belowgrade work area, or subfloor work area that is not ventilated
	-	Unclassified	Unclassified	Entire space within any pit, belowgrade work area, or subfloor work area that is provided with ventilation of at least 0.3 $m^3/min/m^2$ (1 $ft^3/min/ft^2$) of floor area, with suction taken from a point within 300 mm (12 in.) of floor level
Specific areas adjacent to classified locations	Unclassified	Unclassified	Areas adjacent to classified locations where flammable vapors are not likely to be released, such as stock rooms, switchboard rooms, and other similar locations, where mechanically ventilated at a rate of four or more air changes per hour or designed with positive air pressure, or where effectively cut off by walls or partitions	

*Includes draining of Class I liquids from vehicles.

Statement of Problem and Substantiation for Public Input

This isn't "guidance," it is a prescriptive requirement.

Submitter Information Verification

Submitter Full Name: Ryan Jackson
Organization: Ryan Jackson
Street Address:
City:
State:
Zip:
Submittal Date: Wed Sep 09 11:53:02 EDT 2020
Committee: NEC-P14

Committee Statement

Resolution: FR-8694-NFPA 70-2021

Statement: The words ‘cut off’ have been replaced by ‘separated’ for clarity. The words “guidance found in” have been replaced by “shall be in accordance with” as this is a prescriptive requirement. The term “belowgrade” has been revised to “below grade” in the table.

Public Input No. 597-NFPA 70-2020 [Section No. 511.3(C)]

(C) Repair Garages, Major and Minor.

Where vehicles using Class I liquids or heavier-than-air gaseous fuels (such as LPG) are repaired, hazardous area classification guidance is found in Table 511.3(C).

Informational Note: For additional information, see NFPA 30A-2018, *Code for Motor Fuel Dispensing Facilities and Repair Garages*, Table 8.3.2.

Table 511.3(C) Extent of Classified Locations for Major and Minor Repair Garages with Heavier-Than-Air Fuel

Location	Class I		Extent of Classified Location	
	Division (Group D)	Zone (Group IIA)		
Repair garage, major (where Class I liquids or gaseous fuels are transferred or dispensed*)	1	1	Entire space within any pit, belowgrade work area, or subfloor work area that is not ventilated	
	2	2	Entire space within any pit, belowgrade work area, or subfloor work area that is provided with ventilation of at least 0.3 $m^3/min/m^2$ (1 $ft^3/min/ft^2$) of floor area, with ~~suction taken from a point within~~ exhaust ducts located within the zone that is below 300 mm (12 in.) of floor level	
	-	2	2	Up to 450 mm (18 in.) above floor level of the room, except as noted below, for entire floor area
	-	Unclassified	Unclassified	Up to 450 mm (18 in.) above floor level of the room where room is provided with ventilation of at least 0.3 $m^3/min/m^2$ (1 $ft^3/min/ft^2$) of floor area, with ~~suction taken from a point within~~ exhaust ducts located within the zone that is below 300 mm (12 in.) of floor level
	-	2	2	Within 0.9 m (3 ft) of any fill or dispensing point, extending in all directions
Specific areas adjacent to classified locations	Unclassified	Unclassified	Areas adjacent to classified locations where flammable vapors are not likely to be released, such as stock rooms, switchboard rooms, and other similar locations, where mechanically ventilated at a rate of four or more air changes per hour	

Location	Class I Division (Group D)	Class I Zone (Group IIA)	Extent of Classified Location	
			or designed with positive air pressure or where effectively cut off by walls or partitions	
Repair garage, minor (where Class I liquids or gaseous fuels are not transferred or dispensed*)	2	2	Entire space within any pit, belowgrade work area, or subfloor work area that is not ventilated	
	-	2	2	Up to 450 mm (18 in.) above floor level, extending 0.9 m (3 ft) horizontally in all directions from opening to any pit, belowgrade work area, or subfloor work area that is not ventilated
	-	Unclassified	Unclassified	Entire space within any pit, belowgrade work area, or subfloor work area that is provided with ventilation of at least 0.3 $m^3/min/m^2$ (1 $ft^3/min/ft^2$) of floor area, with ~~suction taken from a point within~~ exhaust ducts located within the zone that is below 300 mm (12 in.) of floor level
Specific areas adjacent to classified locations	Unclassified	Unclassified	Areas adjacent to classified locations where flammable vapors are not likely to be released, such as stock rooms, switchboard rooms, and other similar locations, where mechanically ventilated at a rate of four or more air changes per hour or designed with positive air pressure, or where effectively cut off by walls or partitions	

*Includes draining of Class I liquids from vehicles.

Statement of Problem and Substantiation for Public Input

The "unclassified" exemption (as I call it) is somewhat nebulous and needs a more definitive location for the exhaust. I will cite an example from a plan review that I'm working on now.

I have a commercial repair garage that is approximately 4000 square feet, and the registered design professionals are attempting to say that it is an unclassified location. They have installed exhaust ducts located in all the corners of this very large garage-repair area. Each exhaust duct measures 10-inches tall x 20-inches wide. The bottom of the ducts are located at 10-inches above the finished floor (A.F.F.). This falls within the present code language, "with suction taken from a point within 300 mm (12 in.) of floor level," since 2-inches of the duct is within this area. I rejected the electrical plan review.

It is my take on this code section that the ENTIRE exhaust duct needs to be below 12-inches A.F.F. I believe that is the intent of the code when it says, "with suction taken from a point within 300 mm (12 in.) of floor level." I believe this is also the intent of the code panel.

If the entire duct is not located below 12-inches A.F.F., then THE MAJORITY of the VOLUME OF AIR that the system is attempting to exhaust comes from ABOVE, "a point within 300 mm (12 in.) of floor level." This may not abate the hazard, since some of the air being pulled comes from above 12-inches of the floor.

Taking a look at the 2017 NEC handbook for a moment, please turn to page 658. The example given is for pits and it isn't the greatest diagram, but the principal is the same. The exhaust duct in the pit is clearly shown completely within the first 12-inches A.F.F.

Reason for the code change is for clarity, to avoid language that can be interpreted in more than one way. Another reason is to aid with enforcement of this section.

If I'm mistaken in my interpretation, then the present language still isn't any good. Electricians, electrical plans examiners, electrical inspectors, and other electrical professionals are not mechanical engineers, and we really shoudn't have to be. We don't understand what is meant by "with suction taken from a point..." Is part of an exhaust duct, "a point?" How would an electrical professional know this?

The NEC is an enforcement tool. The electrical inspector needs this language to be in terms that he/she can understand quickly and easily. If it is true that only one or two inches of an exhaust duct need be within the first 12-inches A.F.F., then please consider revising the language to make it a zone, and specify that exhaust ducts must be entirely located in "the zone xx-inches A.F.F.," etc., etc. We need more definitive terms with regard to this code.

Reason for change is twofold:
1-Clarity
2-Aid the electrical inspector with enforcement of this section.

Related Public Inputs for This Document

Related Input	Relationship
Public Input No. 601-NFPA 70-2020 [Section No. 511.3(D)]	
Public Input No. 601-NFPA 70-2020 [Section No. 511.3(D)]	

Submitter Information Verification

Submitter Full Name: Nick Sasso
Organization: Clark County Building and Fire
Street Address:
City:

State:

Zip:

Submittal Date: Wed Mar 04 14:35:15 EST 2020

Committee: NEC-P14

Committee Statement

Resolution: The intent of the requirement is that the entirety of the suction inlet be located in the space within 300 mm (12in.) of floor level. The proposed wording does not clarify the requirement.

Public Input No. 346-NFPA 70-2020 [Section No. 511.3(D)]

(D) Repair Garages, Major.

Where vehicles using lighter-than-air gaseous fuels (such as hydrogen and natural gas) are repaired or stored, hazardous area classification guidance is found in Table 511.3(D).

Informational Note: For additional information see NFPA 30A-2018, *Code for Motor Fuel Dispensing Facilities and Repair Garages*, Table 8.3.2.

Table 511.3(D) Extent of Classified Locations for Major Repair Garages with Lighter-than-Air Fuel

Location	Class I		Extent of Classified Location
	Division[2]	Zone[3]	
Repair garage, major	2	2	Within 450 mm (18 in.) of ceiling, except as noted below
(where lighter-than-air gaseous fueled[1] vehicles are repaired or stored)	Unclassified	Unclassified	Within 450 mm (18 in.) of ceiling where ventilation of at least 0.3 $m^3/min/m^2$ (1 $ft^3/min/ft^2$) of floor area, with suction taken from a point within 450 mm (18 in.) of the highest point in the ceiling
Specific areas adjacent to classified locations	Unclassified	Unclassified	Areas adjacent to classified locations where flammable vapors are not likely to be released, such as stock rooms, switchboard rooms, and other similar locations, where mechanically ventilated at a rate of four or more air changes per hour or designed with positive air pressure, or where effectively ~~cut off~~ separated by walls or partitions

[1]Includes fuels such as hydrogen and natural gas, but not LPG.

[2]For hydrogen (lighter than air) Group B, or natural gas Group D.

[3]For hydrogen (lighter than air) Group IIC or IIB+H2, or natural gas Group IIA.

Additional Proposed Changes

File Name	Description	Approved
2020_FR_8199_replaces_cut_off_with_disconnect_in_service_equip_definition.docx	2020 NEC FR 8199	

Statement of Problem and Substantiation for Public Input

This PI requests that the term "cut off" be replaced with "separated" which more accurately describes the condition.
The following link provides a definition of "separate": https://www.merriam-webster.com/dictionary/separate
Definition of separate:
transitive verb
1a: to set or keep apart
b: to make a distinction between

2archaic : to set aside for a special purpose
3: to part by a legal separation:
4: to block off
5a: to isolate from a mixture
b: to divide into constituent parts
intransitive verb
1: to become divided or detached
adjective
1a: set or kept apart
2a: not shared with another
3a: existing by itsellf

"Cut off" is a vague term. The NEC Style Manual states:
Paragraph 1.3 Regulatory Adoption
Because the NEC is intended to be suitable for adoption as a regulatory document, it is important that it contain clearly stated mandatory requirements in the Code text.

Paragraph 3.2.1 Unenforceable Terms
The NEC shall not contain references or requirements that are unenforceable or vague.

Paragraph 3.3.4 Word Clarity
Words and terms used in the NEC shall be specific and clear in meaning, and shall avoid jargon, trade terminology, industry specific terms, or colloquial language that is difficult to understand.

Also note that in the 2020 NEC revision cycle CMP 10 replaced the term "cut off" in the definition of service equipment. That action was taken in FR 8199 which is attached for reference.

Companion PI's submitted to correlate this proposed change are 329, 340, 347 and 348

Related Public Inputs for This Document

Related Input	Relationship
Public Input No. 329-NFPA 70-2020 [Section No. 513.3(D)]	
Public Input No. 340-NFPA 70-2020 [Section No. 511.3(C)]	
Public Input No. 347-NFPA 70-2020 [Section No. 511.3(E)(1)]	
Public Input No. 348-NFPA 70-2020 [Section No. 513.3(B)]	
Public Input No. 329-NFPA 70-2020 [Section No. 513.3(D)]	
Public Input No. 340-NFPA 70-2020 [Section No. 511.3(C)]	
Public Input No. 347-NFPA 70-2020 [Section No. 511.3(E)(1)]	
Public Input No. 348-NFPA 70-2020 [Section No. 513.3(B)]	

Submitter Information Verification

Submitter Full Name: Vincent Della Croce
Organization:
Street Address:
City:
State:
Zip:
Submittal Date: Wed Jan 22 16:50:54 EST 2020
Committee: NEC-P14

Committee Statement

Resolution: FR-8696-NFPA 70-2021

Statement: The words ‘cut off’ have been replaced by ‘separated’ for clarity.

First Revision No. 8199-NFPA 70-2018 [Definition: Service Equipment.]

Service Equipment.

The necessary equipment, ~~usually~~ consisting of a circuit breaker(s) or switch(es) and fuse(s) and their accessories, connected to the ~~load end of service conductors to a building or other structure, or an otherwise designated area,~~utility electric system and intended to constitute the main control and ~~cutoff~~disconnect of the ~~supply~~utility electric system. (~~CMP-4~~CMP-10)

Submitter Information Verification

Submitter Full Name: NEC-CMP Panel 10

Committee:

Submittal Date: Mon Jan 15 12:48:37 EST 2018

Committee Statement

Committee Statement: This revision clarifies that "service equipment" connects to the utility electric system which may be service conductors or a service lateral. The word "usually" is deleted because service equipment always consists of a circuit breaker(s) or switch(es) and fuse(s). The word "cutoff" is deleted and replaced with "disconnect" for clarity.

Response Message: FR-8199-NFPA 70-2018

Public Input No. 311-NFPA 70-2017 [Definition: Service Equipment.]
Public Input No. 3308-NFPA 70-2017 [Definition: Service Equipment.]

Ballot Results

This item has passed ballot

x

12 Eligible Voters

0 Not Returned

12 Affirmative All

0 Affirmative with Comments

0 Negative with Comments

0 Abstention

X

Affirmative All

Barnhart, Paul D.
Blizard, Scott A.
Burns, Julian R.
Carter, Charles Robert
Dollard, Jr., James T.

Fredericks, Carl
Koepke, Ed
Rempe, Kenneth J.
Saporita, Vincent J.
Townsend, Steven E.
Vance, Christopher R.
Williams, David A.

Public Input No. 601-NFPA 70-2020 [Section No. 511.3(D)]

(D) Repair Garages, Major.

Where vehicles using lighter-than-air gaseous fuels (such as hydrogen and natural gas) are repaired or stored, hazardous area classification guidance is found in Table 511.3(D).

Informational Note: For additional information see NFPA 30A-2018, *Code for Motor Fuel Dispensing Facilities and Repair Garages*, Table 8.3.2.

Table 511.3(D) Extent of Classified Locations for Major Repair Garages with Lighter-than-Air Fuel

Location	Class I		Extent of Classified Location
	Division[2]	Zone[3]	
Repair garage, major	2	2	Within 450 mm (18 in.) of ceiling, except as noted below
(where lighter-than-air gaseous fueled[1] vehicles are repaired or stored)	Unclassified	Unclassified	Within 450 mm (18 in.) of ceiling where exhaust ventilation is provided of at least 0.3 $m^3/min/m^2$ (1 $ft^3/min/ft^2$) of ~~floor~~ ceiling area, with ~~suction taken from a point within~~ exhaust ducts located within the zone that is within 450 mm (18 in.) of the highest point in the ceiling
Specific areas adjacent to classified locations	Unclassified	Unclassified	Areas adjacent to classified locations where flammable vapors are not likely to be released, such as stock rooms, switchboard rooms, and other similar locations, where mechanically ventilated at a rate of four or more air changes per hour or designed with positive air pressure, or where effectively cut off by walls or partitions

[1]Includes fuels such as hydrogen and natural gas, but not LPG.

[2]For hydrogen (lighter than air) Group B, or natural gas Group D.

[3]For hydrogen (lighter than air) Group IIC or IIB+H2, or natural gas Group IIA.

Statement of Problem and Substantiation for Public Input

Please see PI 597.

This PI also has clean up language as I believe "floor" area should say "ceiling" area.

Related Public Inputs for This Document

Related Input	Relationship
Public Input No. 597-NFPA 70-2020 [Section No. 511.3(C)]	
Public Input No. 597-NFPA 70-2020 [Section No. 511.3(C)]	

Submitter Information Verification

Submitter Full Name: Nick Sasso
Organization: Clark County Building and Fire
Street Address:
City:
State:
Zip:
Submittal Date: Wed Mar 04 15:18:37 EST 2020
Committee: NEC-P14

Committee Statement

Resolution: The intent of the requirement is that the entirety of the suction inlet be located in the space within 300 mm (12in.) of floor level. The proposed wording does not clarify the requirement. Although the hazard presented by a lighter-than-air material, the ventilation requirements are based on the floor area of the space.

Public Input No. 1618-NFPA 70-2020 [Section No. 511.3(E)]

(E) Modifications to Classification.

(1) Specific Areas Adjacent to Classified Locations.

Areas adjacent to classified locations in which flammable vapors are not likely to be released, such as stock rooms, switchboard rooms, and other similar locations, shall be unclassified where mechanically ventilated at a rate of four or more air changes per hour, or designed with positive air pressure, or where ~~effectively~~ cut off by ~~walls or partitions~~ an unpierced wall, roof, or other solid partition .

(2) Alcohol-Based Windshield Washer Fluid.

The area used for storage, handling, or dispensing into motor vehicles of alcohol-based windshield washer fluid in repair garages shall be unclassified unless otherwise classified by a provision of 511.3. [**30A:**8.3.1, Exception]

Statement of Problem and Substantiation for Public Input

The edits simply are to make the requirement clear and match the text contained in 514.3(B)(1).

Submitter Information Verification

Submitter Full Name: Mike Holt
Organization: Mike Holt Enterprises Inc
Street Address:
City:
State:
Zip:
Submittal Date: Wed Jun 24 13:20:57 EDT 2020
Committee: NEC-P14

Committee Statement

Resolution: FR-8684-NFPA 70-2021
Statement: The term “cutoff” has been changed to “separated”. The wording has been revised to align with 514.3(B)(1).

Public Input No. 347-NFPA 70-2020 [Section No. 511.3(E)(1)]

(1) Specific Areas Adjacent to Classified Locations.

Areas adjacent to classified locations in which flammable vapors are not likely to be released, such as stock rooms, switchboard rooms, and other similar locations, shall be unclassified where mechanically ventilated at a rate of four or more air changes per hour, or designed with positive air pressure, or where effectively ~~cut off by~~ separated by walls or partitions.

Additional Proposed Changes

File Name	Description	Approved
2020_FR_8199_replaces_cut_off_with_disconnect_in_service_equip_definition.docx	2020 NEC FR 8199	

Statement of Problem and Substantiation for Public Input

This PI requests that the term "cut off" be replaced with "separated" which more accurately describes the condition.
The following link provides a definition of "separate": https://www.merriam-webster.com/dictionary/separate
Definition of separate:
transitive verb
1a: to set or keep apart
b: to make a distinction between
2archaic : to set aside for a special purpose
3: to part by a legal separation:
4: to block off
5a: to isolate from a mixture
b: to divide into constituent parts
intransitive verb
1: to become divided or detached
adjective
1a: set or kept apart
2a: not shared with another
3a: existing by itsellf

"Cut off" is a vague term. The NEC Style Manual states:
Paragraph 1.3 Regulatory Adoption
Because the NEC is intended to be suitable for adoption as a regulatory document, it is important that it contain clearly stated mandatory requirements in the Code text.

Paragraph 3.2.1 Unenforceable Terms
The NEC shall not contain references or requirements that are unenforceable or vague.

Paragraph 3.3.4 Word Clarity
Words and terms used in the NEC shall be specific and clear in meaning, and shall avoid jargon, trade terminology, industry specific terms, or colloquial language that is difficult to understand.

Also note that in the 2020 NEC revision cycle CMP 10 replaced the term "cut off" in the definition of service equipment. That action was taken in FR 8199 which is attached for reference.

Companion PI's submitted to correlate this proposed change are 329, 340, 346 and 348

Related Public Inputs for This Document

Related Input	Relationship
Public Input No. 329-NFPA 70-2020 [Section No. 513.3(D)]	
Public Input No. 340-NFPA 70-2020 [Section No. 511.3(C)]	
Public Input No. 346-NFPA 70-2020 [Section No. 511.3(D)]	
Public Input No. 348-NFPA 70-2020 [Section No. 513.3(B)]	
Public Input No. 329-NFPA 70-2020 [Section No. 513.3(D)]	
Public Input No. 340-NFPA 70-2020 [Section No. 511.3(C)]	
Public Input No. 346-NFPA 70-2020 [Section No. 511.3(D)]	
Public Input No. 348-NFPA 70-2020 [Section No. 513.3(B)]	

Submitter Information Verification

Submitter Full Name: Vincent Della Croce
Organization:
Street Address:
City:
State:
Zip:
Submittal Date: Wed Jan 22 16:54:31 EST 2020
Committee: NEC-P14

Committee Statement

Resolution: FR-8684-NFPA 70-2021
Statement: The term “cutoff” has been changed to “separated”. The wording has been revised to align with 514.3(B)(1).

First Revision No. 8199-NFPA 70-2018 [Definition: Service Equipment.]

Service Equipment.

The necessary equipment, ~~usually~~ consisting of a circuit breaker(s) or switch(es) and fuse(s) and their accessories, connected to the ~~load end of service conductors to a building or other structure, or an otherwise designated area,~~utility electric system and intended to constitute the main control and ~~cutoff~~disconnect of the ~~supply~~utility electric system. (~~CMP-4~~CMP-10)

Submitter Information Verification

Submitter Full Name: NEC-CMP Panel 10

Committee:

Submittal Date: Mon Jan 15 12:48:37 EST 2018

Committee Statement

Committee Statement: This revision clarifies that "service equipment" connects to the utility electric system which may be service conductors or a service lateral. The word "usually" is deleted because service equipment always consists of a circuit breaker(s) or switch(es) and fuse(s). The word "cutoff" is deleted and replaced with "disconnect" for clarity.

Response Message: FR-8199-NFPA 70-2018

Public Input No. 311-NFPA 70-2017 [Definition: Service Equipment.]
Public Input No. 3308-NFPA 70-2017 [Definition: Service Equipment.]

Ballot Results

This item has passed ballot

x

12 Eligible Voters

0 Not Returned

12 Affirmative All

0 Affirmative with Comments

0 Negative with Comments

0 Abstention

X

Affirmative All

Barnhart, Paul D.
Blizard, Scott A.
Burns, Julian R.
Carter, Charles Robert
Dollard, Jr., James T.

Fredericks, Carl
Koepke, Ed
Rempe, Kenneth J.
Saporita, Vincent J.
Townsend, Steven E.
Vance, Christopher R.
Williams, David A.

Public Input No. 4495-NFPA 70-2020 [Section No. 511.4(A)]

(A) Wiring Located in Class I Locations.

Within Class I locations as classified in 511.3, wiring shall conform ~~to applicable provisions~~ with Part II of Article 501.

Statement of Problem and Substantiation for Public Input

Section 4.1.4 of the 2020 NEC(r) Style Manual prohibits reference to an entire article, with the exception of Article 100. It is recommended to change to refer the user to Part II of Article 501 to comply with this requirement, while not changing the intent of the section.

Submitter Information Verification

Submitter Full Name: Richard Holub
Organization: The DuPont Company, Inc.
Street Address:
City:
State:
Zip:
Submittal Date: Thu Sep 10 14:15:04 EDT 2020
Committee: NEC-P14

Committee Statement

Resolution: FR-8733-NFPA 70-2021

Statement: Section 4.1.4 of the 2020 NEC Style Manual prohibits reference to an entire article, with the exception of Article 100. The panel has changed to refer the user to Part II of Article 501 to comply with this requirement, while not changing the intent of the section.It was noted by the panel that the current language did not allow intrinsically safe systems which would not be wired in accordance with Article 501.

Public Input No. 4498-NFPA 70-2020 [Section No. 511.4(B)]

(B) Equipment Located in Class I Locations.

Within Class I locations as defined in 511.3, equipment shall conform to ~~applicable provisions~~ Part III of Article 501.

(1) Fuel-Dispensing Units.

Where fuel-dispensing units (other than liquid petroleum gas, which is prohibited) are located within buildings, ~~the requirements of Article~~ 514 .1 shall ~~govern~~ apply .

Where mechanical ventilation is provided in the dispensing area, the control shall be interlocked so that the dispenser cannot operate without ventilation, as prescribed in 500.5(B)(2).

(2) Portable Lighting Equipment.

Portable lighting equipment shall be equipped with handle, lampholder, hook, and substantial guard attached to the lampholder or handle. All exterior surfaces that might come in contact with battery terminals, wiring terminals, or other objects shall be of nonconducting material or shall be effectively protected with insulation. Lampholders shall be of an unswitched type and shall not provide means for plug-in of attachment plugs. The outer shell shall be of molded composition or other suitable material. Unless the lamp and its cord are supported or arranged in such a manner that they cannot be used in the locations classified in 511.3, they shall be of a type identified for Class I, Division 1 locations.

Statement of Problem and Substantiation for Public Input

Section 4.1.4 of the 2020 NEC(r) Style Manual prohibits reference to an entire article, with the exception of Article 100. Pointing the user to Part III of Article 501 accomplishes this objective without changing the intent of the Code. It is noted, however, that this section does not correlate with Article 504 which would allow Intrinsically Safe Systems in lieu of the Part III, Article 501 equipment specified. The CMP should make a conscious decision if that is what is intended, here, or modify this text accordingly. Additionally, the reference to Article 514 was changed to the point to the scope of 514 to make it clear that in these situations, the motor fuel dispensing article applies and to comply with Section 4.1.4 of the Style Manual.

Submitter Information Verification

Submitter Full Name: Richard Holub
Organization: The DuPont Company, Inc.
Street Address:
City:
State:
Zip:
Submittal Date: Thu Sep 10 14:18:04 EDT 2020
Committee: NEC-P14

Committee Statement

Resolution: FR-8734-NFPA 70-2021

Statement: Section 4.1.4 of the 2020 NEC Style Manual prohibits reference to an entire article, with the exception of Article 100. Pointing the user to Part III of Article 501 accomplishes this objective without changing the intent of the Code. Additionally, the reference to Article 514 was changed to the point to the scope of 514 to make it clear that in these situations, the motor fuel dispensing article applies and to comply with Section 4.1.4 of the Style Manual. It was noted by the panel that the current language did not allow intrinsically safe systems.

Public Input No. 3168-NFPA 70-2020 [Section No. 511.7(A)(1)]

(1) Fixed Wiring Above Class I Locations.

All fixed wiring above ~~Class I~~ Class I locations ~~shall be in metal raceways, rigid nonmetallic conduit, electrical nonmetallic tubing, flexible metal conduit, liquidtight flexible metal conduit, or liquidtight flexible nonmetallic conduit, or shall be Type MC, AC, MI, manufactured wiring systems, or PLTC cable in accordance with Article 725 , or Type TC cable or Type ITC cable in accordance with Article 727 .~~ shall be in accordance with 501.10(B). Cellular metal floor raceways or cellular concrete floor raceways shall be permitted to be used only for supplying ceiling outlets or extensions to the area below the floor, but such raceways shall have no connections leading into or through any Class I location above the floor.

Statement of Problem and Substantiation for Public Input

Wiring methods currently included in 511.7(A)(1) are consistent with Class I, Division 2 wiring methods, however the list is not consistent with the full list of wiring methods permitted for Division 2. For example PLTC-ER and ITC-ER cables are not included. Referring back to 501.10(B)(1) will help to eliminate inconsistencies that occur when a requirement is updated in one Article such as 501 but not updated in the same requirement in another Article.

Related Public Inputs for This Document

Related Input	Relationship
Public Input No. 3167-NFPA 70-2020 [Section No. 515.7(A)]	
Public Input No. 3170-NFPA 70-2020 [Section No. 514.7]	
Public Input No. 3175-NFPA 70-2020 [Section No. 516.7(A)]	
Public Input No. 3204-NFPA 70-2020 [Section No. 516.38(A)]	

Submitter Information Verification

Submitter Full Name: John Simmons
Organization: Florida East Coast JATC
Street Address:
City:
State:
Zip:
Submittal Date: Sun Sep 06 13:31:22 EDT 2020
Committee: NEC-P14

Committee Statement

Resolution: FR-8558-NFPA 70-2021

Statement: The proposed FR changes the wiring methods to a list format as suggested in the Style Manual, The reference to entire articles is corrected. The change for the PVC reference was corrected and RTRC is included. The abbreviations were added in parentheses. The wiring method requirements found in the 501.10(B) list were copied to the wiring methods found here.

The permitted wiring methods should not be located in another article. Having the wiring means in the article that requires them makes the section clearer. The panel did that the subdivision contains a long list of approved wiring methods, in paragraph format. Section 3.3.2 of the NEC Style Manual states that lists or tables should be used rather than long text descriptions.

Public Input No. 3750-NFPA 70-2020 [Section No. 511.7(A)(1)]

(1) Fixed Wiring Above Class I Locations.

All fixed wiring above Class I locations shall be in metal raceways, rigid ~~nonmetallic~~ polyvinyl chloride conduit (PVC) , electrical nonmetallic tubing, flexible metal conduit, liquidtight flexible metal conduit, or liquidtight flexible nonmetallic conduit, or shall be Type MC, AC, MI, manufactured wiring systems, or PLTC cable in accordance with Article 725, or Type TC cable or Type ITC cable in accordance with Article 727. Cellular metal floor raceways or cellular concrete floor raceways shall be permitted to be used only for supplying ceiling outlets or extensions to the area below the floor, but such raceways shall have no connections leading into or through any Class I location above the floor.

Statement of Problem and Substantiation for Public Input

This appears to be an oversight from the renaming of Article 352 several years ago.

Submitter Information Verification

Submitter Full Name: Ryan Jackson
Organization: Ryan Jackson
Street Address:
City:
State:
Zip:
Submittal Date: Wed Sep 09 11:48:06 EDT 2020
Committee: NEC-P14

Committee Statement

Resolution: FR-8558-NFPA 70-2021

Statement: The proposed FR changes the wiring methods to a list format as suggested in the Style Manual, The reference to entire articles is corrected. The change for the PVC reference was corrected and RTRC is included. The abbreviations were added in parentheses. The wiring method requirements found in the 501.10(B) list were copied to the wiring methods found here.

The permitted wiring methods should not be located in another article. Having the wiring means in the article that requires them makes the section clearer. The panel did that the subdivision contains a long list of approved wiring methods, in paragraph format. Section 3.3.2 of the NEC Style Manual states that lists or tables should be used rather than long text descriptions.

Public Input No. 4509-NFPA 70-2020 [Section No. 511.7(A)(1)]

(1) Fixed Wiring Above Class I Locations.

All fixed wiring above Class I locations shall be in metal raceways, rigid nonmetallic conduit, electrical nonmetallic tubing, flexible metal conduit, liquidtight flexible metal conduit, or liquidtight flexible nonmetallic conduit, or shall be Type MC, AC, MI, manufactured wiring systems, ~~or~~ Type PLTC cable ~~in accordance with Article 725~~ , ~~or~~ Type TC cable or Type ITC cable installed in accordance with ~~Article 727~~ the requirements of their particular articles . Cellular metal floor raceways or cellular concrete floor raceways shall be permitted to be used only for supplying ceiling outlets or extensions to the area below the floor, but such raceways shall have no connections leading into or through any Class I location above the floor.

Statement of Problem and Substantiation for Public Input

Section 4.1.4 of the 2020 NEC(r) Style Manual prohibits reference to an entire article, with the exception of Article 100. As Type PLTC is a defined cable type, the language was changed to "Type PLTC" and the article specific references to Article 725 and Article 727 were deleted and the phrase "installed in accordance with their particular articles" was used in an attempt to satisfy the style manual without changing the intent of the Code.

Submitter Information Verification

Submitter Full Name: Richard Holub
Organization: The DuPont Company, Inc.
Street Address:
City:
State:
Zip:
Submittal Date: Thu Sep 10 14:25:26 EDT 2020
Committee: NEC-P14

Committee Statement

Resolution: FR-8558-NFPA 70-2021

Statement: The proposed FR changes the wiring methods to a list format as suggested in the Style Manual, The reference to entire articles is corrected. The change for the PVC reference was corrected and RTRC is included. The abbreviations were added in parentheses. The wiring method requirements found in the 501.10(B) list were copied to the wiring methods found here.

The permitted wiring methods should not be located in another article. Having the wiring means in the article that requires them makes the section clearer. The panel did that the subdivision contains a long list of approved wiring methods, in paragraph format. Section 3.3.2 of the NEC Style Manual states that lists or tables should be used rather than long text descriptions.

Public Input No. 4599-NFPA 70-2020 [Section No. 511.7(A)(1)]

(1) Fixed Wiring Above Class I Locations.

All fixed wiring above Class I locations shall be in metal raceways, rigid ~~nonmetallic conduit~~ polyvinyl chloride conduit , electrical nonmetallic tubing, flexible metal conduit, liquidtight flexible metal conduit, or liquidtight flexible nonmetallic conduit, or shall be Type MC, AC, MI, manufactured wiring systems, or PLTC cable in accordance with Article 725, or Type TC cable or Type ITC cable in accordance with Article 727. Cellular metal floor raceways or cellular concrete floor raceways shall be permitted to be used only for supplying ceiling outlets or extensions to the area below the floor, but such raceways shall have no connections leading into or through any Class I location above the floor.

Statement of Problem and Substantiation for Public Input

The 2008 NEC first referenced Reinforced Thermosetting Resin Conduit (RTRC) as a wiring method (Article 355). High Density Polyethylene Conduit (HDPE) first appeared in the 2005 NEC as Article 353. When Article 352 first changed (2008 NEC) to be titled “Rigid Polyvinyl Chloride Conduit” there were many changes throughout the Code to pick up this change and accordingly change text from “rigid nonmetallic conduit” to “rigid polyvinyl chloride conduit.”
In the 2002 NEC, this section referenced “rigid nonmetallic conduit” (as it still does in the 2020 NEC) before RTRC and HDPE appeared in the Code. This makes it clear that this section intended to permit only the use of rigid polyvinyl chloride conduit identified as “rigid nonmetallic conduit” as the other raceway types were not recognized by the NEC at the time. This term should be changed to rigid polyvinyl chloride and if the cmp wishes to add other types of nonmetallic raceways they should be listed separately as the metal raceways are.

Submitter Information Verification

Submitter Full Name: David Humphrey
Organization: County of Henrico, Virginia
Street Address:
City:
State:
Zip:
Submittal Date: Thu Sep 10 15:37:26 EDT 2020
Committee: NEC-P14

Committee Statement

Resolution: FR-8558-NFPA 70-2021

Statement: The proposed FR changes the wiring methods to a list format as suggested in the Style Manual, The reference to entire articles is corrected. The change for the PVC reference was corrected and RTRC is included. The abbreviations were added in parentheses. The wiring method requirements found in the 501.10(B) list were copied to the wiring methods found here.

The permitted wiring methods should not be located in another article. Having the wiring means in the article that requires them makes the section clearer. The panel did that the subdivision contains a long list of approved wiring methods, in paragraph format. Section 3.3.2 of the NEC Style Manual states that lists or tables should be used rather than long

text descriptions.

Public Input No. 1233-NFPA 70-2020 [Section No. 511.8]

511.8 Underground Wiring Below Class I Locations.

Underground wiring shall be installed in threaded rigid metal conduit or threaded intermediate metal conduit.

Exception: Type PVC conduit, Type RTRC conduit, and Type HDPE conduit shall be permitted where buried under not less than 600 mm (2 ft) of cover. Where Type PVC conduit, Type RTRC conduit, or Type HDPE conduit is used, threaded rigid metal conduit or threaded steel intermediate metal conduit shall be used for the last 600 mm (2 ft) of the underground run to emergence or to the point of connection to the aboveground raceway, and an equipment grounding conductor shall be included to provide electrical continuity of the raceway system and for grounding of non–current-carrying metal parts.

Statement of Problem and Substantiation for Public Input

Clarify that intermediate metal conduit like rigid metal conduit is to be threaded. Article 511.8 language is clear that rigid metal conduit is to be threaded but the requirement for intermediate metal conduit to be threaded is not clear. Language in Article 514.8 is very clear and specific that both rigid and intermediate metal conduit is to be threaded.

The NEC has improved significantly in large part due to improved clarity of terms, consistency of language and phrases, formatting and readability. This change will continue the trend of making the NEC an easier to document for inspectors, installers and others.

Submitter Information Verification

Submitter Full Name: Gary Hein
Organization: Submission is independent of employer.
Street Address:
City:
State:
Zip:
Submittal Date: Sat May 23 12:20:42 EDT 2020
Committee: NEC-P14

Committee Statement

Resolution: FR-8561-NFPA 70-2021

Statement: The panel agrees that the intermediate metal conduit should be threaded. The panel also changed the exception to positive code text to express the requirement more effectively in accordance with Section 3.1.4 of the NEC Style Manual.

Public Input No. 819-NFPA 70-2020 [Section No. 511.8]

511.8 Underground Wiring ~~Below Class I Locations~~ .

Underground wiring shall be installed in threaded rigid metal conduit or intermediate metal conduit.

Exception: Type PVC conduit, Type RTRC conduit, and Type HDPE conduit shall be permitted where buried under not less than 600 mm (2 ft) of cover. Where Type PVC conduit, Type RTRC conduit, or Type HDPE conduit is used, threaded rigid metal conduit or threaded steel intermediate metal conduit shall be used for the last 600 mm (2 ft) of the underground run to emergence or to the point of connection to the aboveground raceway, and an equipment grounding conductor shall be included to provide electrical continuity of the raceway system and for grounding of non–current-carrying metal parts.

Statement of Problem and Substantiation for Public Input

This seeks to undo the change made in the 2020 revision cycle. As currently written, PVC conduit can be placed inside the floor slab of a garage. Table 300.5 requires 24" of cover in parking lots and similar areas subject to vehicular traffic, but that does not apply inside a building. Alternatively, establishing a minimum cover for wiring methods in repair garages would go a long way, but I have no technical substantiation to assign any particular cover depth.

Submitter Information Verification

Submitter Full Name: Ryan Jackson
Organization: Ryan Jackson
Street Address:
City:
State:
Zip:
Submittal Date: Mon Mar 30 17:20:58 EDT 2020
Committee: NEC-P14

Committee Statement

Resolution: The PI does not provide substantiation for the proposed change. Additionally, the requirement is correct as stated. Underground areas below Class I locations are subject to the presence of hazardous materials through leakage through cracks, chases, and holes in slabs.

Public Input No. 4520-NFPA 70-2020 [Section No. 511.10(B)(1)]

(1) General.

All electrical equipment and wiring shall be installed in accordance with Part III of Article 625 , except as noted in 511.10(B)(2) and (B)(3). Flexible cords shall be of a type identified for extra-hard usage.

Statement of Problem and Substantiation for Public Input

Section 4.1.4 of the 2020 NEC(r) Style Manual prohibits reference to an entire article, with the exception of Article 100. Changing the pointer to the specific part of the Article which applies to installation, in lieu of the Article number, complies with the Style Manual without changing the intent of the Code.

Submitter Information Verification

Submitter Full Name: Richard Holub
Organization: The DuPont Company, Inc.
Street Address:
City:
State:
Zip:
Submittal Date: Thu Sep 10 14:36:52 EDT 2020
Committee: NEC-P14

Committee Statement

Resolution: FR-8746-NFPA 70-2021

Statement: Section 4.1.4 of the 2020 NEC Style Manual prohibits reference to an entire article, with the exception of Article 100. Changing the pointer to the specific part of the Article which applies to installation, in lieu of the Article number, complies with the Style Manual without changing the intent of the Code.

Public Input No. 2344-NFPA 70-2020 [Section No. 511.12]

511.12 Ground-Fault Circuit-Interrupter and Arc- Fault Circuit-Interrupter Protection for Personnel.

Ground-fault circuit-interrupter protection for personnel shall be provided as required in 210.8(B) and arc-fault circuit-interrupter protection shall be provided as required in 2010 . 12.

Statement of Problem and Substantiation for Public Input

Arc-fault circuit-interrupters will minimize the amount of energy released and reduce the risk of fire, thus reducing the risk of explosion of hazardous gasses that may be present.

Submitter Information Verification

Submitter Full Name: William Jennings
Organization: William R Jennings Jr Consulting Engineering, Pc
Street Address:
City:
State:
Zip:
Submittal Date: Mon Aug 17 11:55:05 EDT 2020
Committee: NEC-P14

Committee Statement

Resolution: AFCI devices are not investigated for the limitation of energy in hazardous (classified) locations and do not directly provide for and are not intended for personnel protection as are GFCI devices.

Public Input No. 1898-NFPA 70-2020 [Section No. 511.16]

~~**511.16** Grounding and Bonding Requirements.~~

~~**(A)** General Grounding Requirements.~~

~~All metal raceways, the metal armor or metallic sheath on cables, and all non–current-carrying metal parts of fixed or portable electrical equipment, regardless of voltage, shall be grounded.~~

~~**(B)** Supplying Circuits with Grounded and Grounding Conductors in Class I Locations.~~

~~Grounding in Class I locations shall comply with 501.30 .~~

~~**(1)** Circuits Supplying Portable Equipment or Pendants.~~

~~Where a circuit supplies portables or pendants and includes a grounded conductor as provided in Article 200, receptacles, attachment plugs, connectors, and similar devices shall be of the grounding type, and the grounded conductor of the flexible cord shall be connected to the screw shell of any lampholder or to the grounded terminal of any utilization equipment supplied.~~

~~**(2)** Approved Means.~~

~~Approved means shall be provided for maintaining continuity of the equipment grounding conductor between the fixed wiring system and the non–current-carrying metal portions of pendant luminaires, portable luminaires, and portable utilization equipment.~~

Statement of Problem and Substantiation for Public Input

This is already (better) addressed in 501.30 and Article 250. Furthermore, it uses antiquated language ("shall be grounded") that has proved to be vague, hence the efforts of the last several code revision cycles to remove it.

Submitter Information Verification

Submitter Full Name: Ryan Jackson
Organization: Ryan Jackson
Street Address:
City:
State:
Zip:
Submittal Date: Tue Jul 14 11:58:46 EDT 2020
Committee: NEC-P14

Committee Statement

Resolution: The hazardous location requirements are stated in Chapter 5 where CMP 14 has purview. The code making panel does not agree with moving this text entirely to Article 250 which are the general requirements, covered by a different panel. As automotive repair garages are more "commercial" in nature, this text is retained in this article to aid in usability of the code.

Public Input No. 4527-NFPA 70-2020 [Section No. 511.16(B)(1)]

(1) Circuits Supplying Portable Equipment or Pendants.

Where a circuit supplies portables or pendants and includes a grounded conductor as ~~provided~~ required in ~~Article~~ 200.3 , receptacles, attachment plugs, connectors, and similar devices shall be of the grounding type, and the grounded conductor of the flexible cord shall be connected to the screw shell of any lampholder or to the grounded terminal of any utilization equipment supplied.

Statement of Problem and Substantiation for Public Input

Section 4.1.4 of the 2020 NEC(r) Style Manual prohibits reference to an entire article, with the exception of Article 100. Pointing the user to section 200.3 which requires the connection to the grounded system appears to be appropriate to comply with the style manual and not change the intent of the Code. The CMP is encouraged to carefully review this proposal to ensure it meets that intent.

Submitter Information Verification

Submitter Full Name: Richard Holub
Organization: The DuPont Company, Inc.
Street Address:
City:
State:
Zip:
Submittal Date: Thu Sep 10 14:41:59 EDT 2020
Committee: NEC-P14

Committee Statement

Resolution: FR-8732-NFPA 70-2021

Statement: Section 4.1.4 of the 2020 NEC Style Manual prohibits reference to an entire article, with the exception of Article 100. Pointing the user to Section 200.3 which requires the connection to the grounded system complies with the style manual and does not change the intent of the Code.

Public Input No. 2285-NFPA 70-2020 [New Section after 511.16(B)(2)]

Create a new Article 512 that reads per the attached Word document...

Type your content here ...

Additional Proposed Changes

File Name	Description	Approved
Proposed_new_Article_512_rev_.docx	Proposed new Article 512	

Statement of Problem and Substantiation for Public Input

This Public Input is in response to concerns raised by Authorities Having Jurisdiction, and other industry members, regarding fire and explosion hazards associated with equipment used to process and extract plant oils from cannabis. There have been several incidents resulting in injury, such as:
- '11 firefighters hurt in explosion, fire at Los Angeles hash oil plant', <https://kvia.com/news/us-world/2020/05/16/los-angeles-fire-department-spokesman-says-10-firefighters-injured-in-fire-and-explosion-in-downtown-la/>.
- 'Butane explosion in LA's 'Bong Row' injured 12 firefighters in smoking supply warehouse blaze', <https://www.kcrw.com/news/shows/kcrw-features/downtown-explosion-butane-fire-cannabis-extract-regulation>.
- 'New problem for legal weed: Exploding pot factories', <https://www.politico.com/story/2019/02/18/marijuana-factories-explosions-safety-issues-1155850>.

In many cases, the extraction process itself creates a hazardous (classified) location due to the use of flammable solvents such as butane, pentane, hexane, propane, and ethanol which can be released during the processing and extraction of plant oils. The process system may also include high temperatures and high pressures which compound the risk of fire and explosion. ANSI/UL 1389 was developed and published as a consensus standard. The cannabis industry has its own unique set of issues as it rapidly transitions from an illegal to legal industry requiring regulators/officials to become familiar with new extraction and processing technologies. This article addresses the associated risks by requiring listed equipment to elevate the level of safety in the industry.

Addition links include:
- Investigation: Home hash oil labs exploding in Southern California, <https://abc7.com/hash-oil-weed-pot-marijuana/60344/>.
- Criminal investigation launched into explosion at Los Angeles hash oil manufacturer, <https://www.marketwatch.com/story/criminal-investigation-launched-into-explosion-at-los-angeles-hash-oil-manufacturer-2020-05-17>.
- Four Arrested After Illegal Honey Oil Operation Triggers Explosion, Fire At San Leandro Warehouse, <https://sanfrancisco.cbslocal.com/2020/05/07/illegal-drug-operation-triggers-explosion-fire-at-san-leandro-warehouse/>
- Exploding danger: U.S. marijuana oil labs pose deadly, destructive hazard, <https://www.reuters.com/article/us-usa-drugs-insight/exploding-danger-u-s-marijuana-oil-labs-pose-deadly-destructive-hazard-idUSKCN1T51F4>
- Santa Fe pot business cited for violations in explosion; video released, <https://www.abqjournal.com/741087/santa-fe-pot-business-cited-for-violations-in-explosion-video-released.html>
- L.A. explosion investigation includes possible marijuana industry connections, <https://mjbizdaily.com/los-angeles-explosion-investigation-includes-possible-marijuana-industry-connections/>
- Cannabis: Exploding onto the Scene, <https://origin-and-cause.com/articles/cannabis-exploding-onto-the-scene/>
- Marijuana grow & extraction facilities (NFPA Podcast), <https://www.nfpa.org/Codes-and-Standards/Resources/Standards-in-action/Marijuana-grow-and-extraction-facilities>

Submitter Information Verification

Submitter Full Name: Paul Kelly
Organization: UL LLC
Street Address:
City:
State:
Zip:
Submittal Date: Thu Aug 13 15:41:24 EDT 2020
Committee: NEC-P14

Committee Statement

Resolution: FR-8499-NFPA 70-2021

Statement: A new Article 512 has been added to cover cannabis oil equipment and cannabis oil systems using flammable materials. The proposed text of the public input has been revised to comply with the NEC Style Manual and to remove aspects of cannabis oil operations not within the purview of the NEC.

(PROPOSED NEW ARTICLE 512)

Cannabis Oil Equipment and Systems for Hazardous (Classified) Locations

512.1 Scope. This Article covers, but is not limited to cannabis oil preparatory equipment, extraction equipment, booths, post processing equipment, and systems for commercial and industrial hazardous (classified) locations.

Informational Note: Installation of cannabis oil equipment and systems is intended to be in a distinct room that is part of a commercial or industrial building or booth, or for outdoor use if suitable.

512.2 Definitions. The definitions in this section shall apply only within this article.

Safety Officer: Responsible for overseeing all installation, operation, and any maintenance activities, in accordance with the applicable codes and manufacturer's instructions.

Cannabis Oil Preparatory Equipment. Equipment that is used to prepare the plant material for subsequent extraction of the plant oil (e.g. trimming, deseeding, drying/curing).

Cannabis Oil Extraction Equipment. Equipment that uses flammable material (solvents) in the process of extracting the oil from the plant material.

Informational Note: Extraction equipment may use flammable solvents to extract the oil from the plant material by saturating the plant material in a vented container, sealed container, or pressure vessel. Typical flammable solvents used in the extraction process include butane, ethanol, hexane, pentane, propane, and LPG.

Cannabis Oil Booths. Enclosed rooms, or modified freestanding shipping containers (or "pods"), specifically designed to house and protect cannabis oil equipment and systems.

Informational Note: Cannabis oil booths may be designed to house a single piece or multiple pieces of cannabis oil equipment. Booths range in size, and in some cases may be large enough to permit entrance of personnel to perform the processing tasks.

Cannabis Oil Post Processing Equipment. Equipment that is used in the final processing stages of extracting plant oil (e.g. vacuum ovens, rotary evaporators, solvent recovery pumps).

Cannabis Oil Systems. Any combination of cannabis oil equipment needed for the overall extraction process (e.g. cannabis oil preparatory equipment, cannabis oil extraction equipment, cannabis oil booths, cannabis oil post processing equipment).

512.4 Documentation. All areas designated as hazardous (classified) locations shall be properly documented. This documentation shall be available to those authorized to design, install, inspect, maintain, or operate electrical equipment at the location.

Informational Note No. 1: Cannabis oil equipment and systems that utilize Class I liquids and compressed liquified flammable materials as solvents may release these flammable materials during normal operation. Such a release can result in the need to classify the area surrounding the equipment that utilize such solvents. For information on cannabis oil equipment and systems for hazardous (classified) locations, see ANSI/UL 1389, Plant Oil Extraction Equipment for Installation and Use in Ordinary (Unclassified) Locations and Hazardous (Classified) Locations.

Informational Note No. 2: For further information on the classification of locations, see NFPA 30-2021, Flammable and Combustible Liquids Code; NFPA 33 -2021, Standard for Spray Application Using Flammable or Combustible Materials; NFPA 497-2021, Recommended Practice for the Classification of

Flammable Liquids, Gases, or Vapors and of Hazardous (Classified) Locations for Electrical Installations in Chemical Process Areas.

Informational Note No. 3: For further information on the installation of cannabis oil equipment and systems, see the manufacturer's installation instructions, together with NFPA 1- 2021 Fire Code, NFPA 55-2020, Compressed Gases And Cryogenic Fluids Code, NFPA 58-2020, Liquefied Petroleum Gas Code and the International Fire Code – 2021.

512.6 Qualified Personnel. The installation, operation and maintenance of cannabis oil equipment and systems shall only be performed by qualified persons in accordance with the applicable codes, together with the manufacturer's instructions.

Informational Note: Qualified persons are trained and qualified by the equipment manufacturer or their designee, or as otherwise directed by the Safety Officer. Such persons are intended to be experienced in such work and to be familiar with all safety precautions.

512.8 Maintenance.

Cannabis oil equipment and systems shall be maintained in proper and safe operating condition. The required maintenance shall be in accordance with the manufacturer's requirements and industry standards. A written record of the system maintenance shall be kept and shall include records of repairs and replacements necessary to maintain the system in proper and safe operating condition.

Informational Note: For information related to general electrical equipment maintenance and developing an effective electrical preventive maintenance (EPM) program, see NFPA 70B-2019, Recommended Practice for Electrical Equipment Maintenance.

512.10 Listing. Cannabis oil preparatory equipment, extraction equipment, booths, and post processing equipment shall be listed for the location.

512.12 Wiring and Equipment. All wiring and equipment installed or operated within any of the Class I locations defined in 512.14 shall comply with the applicable provisions of Part II and Part III of Article 501 or the applicable provisions of Article 505 as applicable for the Division or Zone area in which they are used.

Where all potential ignition sources within these booths are protected for Class I, Division 1 or Zone 1, gas detection shall not be required to be provided within the booth. Where potential ignition sources within these booths are protected for Class I, Division 2 or Zone 2, gas detection shall be provided within the booth.

Informational note: For further information, see ANSI/UL-60079-29-2-2018, Explosive Atmospheres — Part 29-2: Gas Detectors – Selection, Installation, Use and Maintenance of Detectors for Flammable Gases and Oxygen.

512.13 Wiring and Equipment Installed Above Class I Locations.

(A) Wiring. All fixed wiring above the Class I locations other than above cannabis oil booths shall be in metal raceways, Type PVC conduit, Type RTRC conduit, or electrical nonmetallic tubing. Where cables are used they shall be Type MI, Type TC, or Type MC cable. Where cellular metal raceways are used, they shall not have connections leading into or passing through the Class I location unless suitable seals are provided.

(B) Equipment. Equipment that could produce arcs, sparks, or particles of hot metal, such as lamps and lampholders for fixed lighting, cutouts, switches, receptacles, motors, or other equipment having make and break or sliding contacts, where installed above a Class I location other than above cannabis oil booths, shall be of the totally enclosed type or be constructed so as to prevent the escape of sparks or hot metal particles.

512.14 Area Classification.
Area classification involving heavier than air flammable gases or vapors shall be in accordance with 512.14(A) and 512.14(B). For the purposes of area classification, the Division system and the Zone system shall not be intermixed for any given source of release.

Informational Note 1:Some equipment applications can result in the release of heavier than air flammable gases or vapors into the surrounding atmosphere as a normal part of the overall extraction process (e. g. during the disconnecting or opening of vessels containing flammable solvents, or during off-gassing of spent material or extracted plant oil). Further, cannabis oil equipment and systems can include the connection of external containers, or other external sources, of flammable solvent to the cannabis oil equipment and systems.

Informational Note 2: For applications involving the release of lighter than air flammable gases or vapors, area classification is in accordance with NFPA 497, Recommended Practice for the Classification of Flammable Liquids, Gases, or Vapors and of Hazardous (Classified) Locations for Electrical Installations in Chemical Process Areas..

(A) Cannabis Oil Equipment and Systems other than Booths.

(1) Class I, Division 1 or Zone 1 areas. For sources of gases or vapors from a Class IA, IB or IC material, the area classification shall be in accordance with the following:
(a) The area within 915 mm (3 ft) in all directions from any such equipment or container, and extending to the floor or grade level shall be classified as Class I, Division 1 or Zone 1, whichever is applicable.
(b) The area extending 610 mm (2 ft) beyond the Class I, Division 1 or Zone 1 location shall be classified as Class I, Division 2 or Zone 2, whichever is applicable.
(c) The area extending 1525 mm (5 ft) horizontally beyond the area described in 512.14(1)(b) up to a height of 460 mm (18 in.) above the floor or grade level shall be classified as Class I, Division 2 or Zone 2, whichever is applicable.
(d) The area inside of a tank or container, and the inside of equipment which contains a flammable material shall be classified as Class I, Division 1 or Zone 0, whichever is applicable.
(e) Sumps, pits, or below grade channels within 3.5 m (10 ft) horizontally of a vapor source shall be classified as Class I, Division 1 or Zone 1. If the sump, pit, or channel extends beyond 3.5 m (10 ft) from the vapor source, it shall be provided with a vapor stop or it shall be classified as Class I, Division 1 or Zone 1 for its entire length.

Electrical wiring and equipment installed in these areas shall be suitable for the location, as shown in Figure 512.14(A1).

(2) Class I, Division 2 or Zone 2 areas. Flammable solvent shall not be released during the extraction process, except during the disconnecting or opening of vessels containing flammable solvents, or during off-gassing of spent material or extracted plant oil. Gas or vapor concentration from such permitted releases shall not exceed 25% LFL without ventilation.

For sources of gas or vapor from a Class IA, IB or IC material, the area classification shall be in accordance with the following:
(a) The area within 915 mm (3 ft) in all directions from any such equipment or container, and extending to the floor or grade level shall be classified as Class I, Division 2 or Zone 2, whichever is applicable.
(b) The area extending beyond the Division 2 or Zone 2 area shall be unclassified.
(c) The area inside of a tank or container, and the inside of equipment which contains a flammable material shall be classified as Class I, Division 1 or Zone 0, whichever is applicable.
(d) Sumps, pits, or below grade channels within 3.5 m (10 ft) horizontally of a vapor source shall be classified as Class I, Division 1 or Zone 1. If the sump, pit, or channel extends beyond 3.5 m (10 ft) from the vapor source, it shall be provided with a vapor stop or it shall be classified as Class I, Division 1 or Zone 1 for its entire length.

Electrical wiring and equipment installed in these areas shall be suitable for the location, as shown in Figure 512.14(A2).

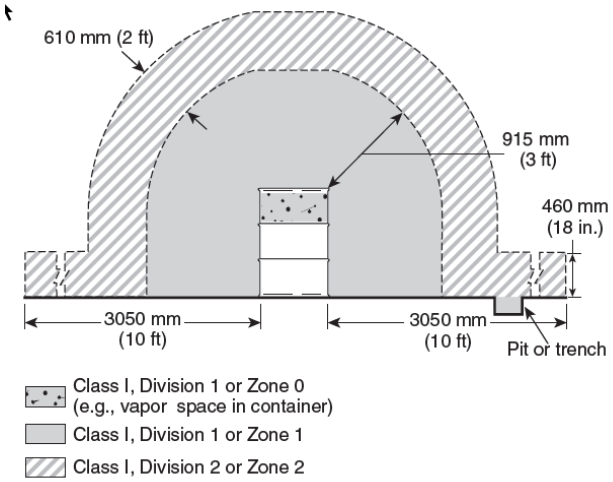

FIGURE 516.4 Electrical Area Classification for Class I Liquid Operations Around Open Containers, Supply Containers, Waste Containers, Spray Gun Cleaners, and Solvent Distillation Units. [33:Figure 6.5.5.2]

Create a Figure 512.14(A1) and (A2) similar to this for a cannabis oil equipment as a vapor source

(B) Cannabis Oil Booths. Air exhausted from the booths is not permitted to be recirculated or exhausted from the booths into the building room in which the booths are installed. Regarding ventilation other than exhaust ventilation, it shall be permitted to provide ventilation to the booths, but shall not be recirculated or exhausted from the booth into the building room in which the booths are installed.

(1) Class I, Division 1 or Zone 1 areas. For sources of gas or vapor from a Class IA, IB or IC material, the area classification shall be in accordance with the following:
(1) The area within the booth shall be classified as Class I, Division 1 or Zone 1, whichever is applicable, as shown in Figure 512.14(B1)
(2) The area within 915 mm (3 ft) of any opening shall be classified as Class I, Division 2 or Zone 2, whichever is applicable.
(3) The interior of fresh air supply ducts and fresh air supply plenums shall be unclassified.

(2) Class I, Division 2 or Zone 2 areas. Flammable solvent shall not be released during the extraction process, except during the disconnecting or opening of vessels containing flammable solvents, or during off-gassing of spent material or extracted plant oil. Vapor concentration from such permitted releases shall not exceed 25% LFL without ventilation.

For sources of vapor or gas from a Class IA, IB or IC material, the area classification shall be in accordance with the following:
(a) The area within the booth shall be classified as Class I, Division 2 or Zone 2, whichever is applicable, as shown in Figure 512.14(B2)
(b) The area outside any opening shall be unclassified.
(c) The interior of fresh air supply ducts and fresh air supply plenums shall be unclassified.

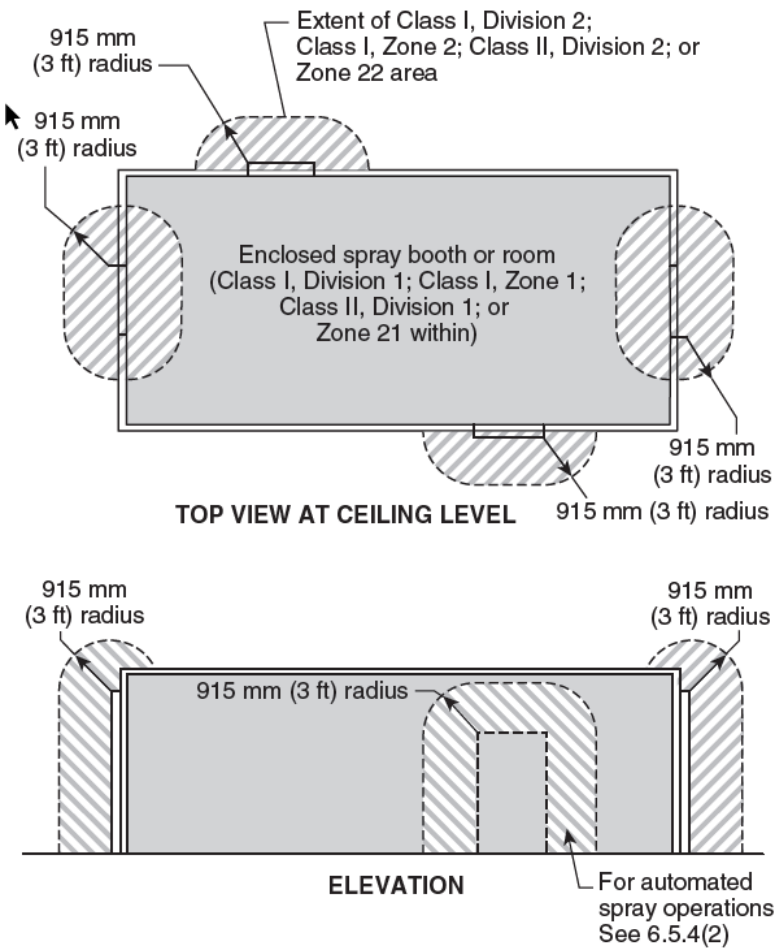

FIGURE 516.5(D)(4) Class I, Division 2; Class I, Zone 2; Class II, Division 2; or Zone 22 Locations Adjacent to an Enclosed Spray Booth or Spray Room. [33:Figure 6.5.4]

Create a new figure 512.14(B1) and (B2) without Class II, and without Zone 22

512.16 Marking. Cannabis oil preparatory equipment, extraction equipment, booths, and post processing equipment shall be marked to identify the area classification for which it is to be installed.

(A) Division Equipment
Equipment identified for Class I, Division 1 or Class I, Division 2 shall be marked in accordance with 500.8(C).

(B) Zone Equipment
Equipment identified for Zone 1 or Zone 2 shall be marked in accordance with 505.9(C)(2).

512.18 Instructions. Legible installation, operation, and maintenance instructions shall be provided with all cannabis oil equipment and systems. These instructions shall identify risks which may result in injury to persons, and state the precautions to be taken to reduce each risk.

Public Input No. 348-NFPA 70-2020 [Section No. 513.3(B)]

(B) Areas Not ~~Cut Off or~~ Separated or Ventilated.

The entire area of the hangar, including any adjacent and communicating areas not suitably ~~cut off from~~ separated from the hangar, shall be classified as a Class I, Division 2 or Zone 2 location up to a level 450 mm (18 in.) above the floor.

Additional Proposed Changes

File Name	Description	Approved
2020_FR_8199_replaces_cut_off_with_disconnect_in_service_equip_definition.docx	2020 NEC FR 8199	

Statement of Problem and Substantiation for Public Input

This PI requests that the term "cut off" be replaced with "separated" which more accurately describes the condition.
The following link provides a definition of "separate": https://www.merriam-webster.com/dictionary/separate
Definition of separate:
transitive verb
1a: to set or keep apart
b: to make a distinction between
2archaic : to set aside for a special purpose
3: to part by a legal separation:
4: to block off
5a: to isolate from a mixture
b: to divide into constituent parts
intransitive verb
1: to become divided or detached
adjective
1a: set or kept apart
2a: not shared with another
3a: existing by itsellf

"Cut off" is a vague term. The NEC Style Manual states:
Paragraph 1.3 Regulatory Adoption
Because the NEC is intended to be suitable for adoption as a regulatory document, it is important that it contain clearly stated mandatory requirements in the Code text.

Paragraph 3.2.1 Unenforceable Terms
The NEC shall not contain references or requirements that are unenforceable or vague.

Paragraph 3.3.4 Word Clarity
Words and terms used in the NEC shall be specific and clear in meaning, and shall avoid jargon, trade terminology, industry specific terms, or colloquial language that is difficult to understand.

Also note that in the 2020 NEC revision cycle CMP 10 replaced the term "cut off" in the definition of service equipment. That action was taken in FR 8199 which is attached for reference.

Companion PI's submitted to correlate this proposed change are 329, 340, 346 and 347

Related Public Inputs for This Document

Related Input	Relationship
Public Input No. 329-NFPA 70-2020 [Section No. 513.3(D)]	
Public Input No. 340-NFPA 70-2020 [Section No. 511.3(C)]	
Public Input No. 346-NFPA 70-2020 [Section No. 511.3(D)]	
Public Input No. 347-NFPA 70-2020 [Section No. 511.3(E)(1)]	
Public Input No. 329-NFPA 70-2020 [Section No. 513.3(D)]	
Public Input No. 340-NFPA 70-2020 [Section No. 511.3(C)]	
Public Input No. 346-NFPA 70-2020 [Section No. 511.3(D)]	
Public Input No. 347-NFPA 70-2020 [Section No. 511.3(E)(1)]	

Submitter Information Verification

Submitter Full Name: Vincent Della Croce
Organization:
Street Address:
City:
State:
Zip:
Submittal Date: Wed Jan 22 16:57:29 EST 2020
Committee: NEC-P14

Committee Statement

Resolution: FR-8698-NFPA 70-2021
Statement: The words ‘cut off’ have been changed to ‘separated’ for clarity.

First Revision No. 8199-NFPA 70-2018 [Definition: Service Equipment.]

Service Equipment.

The necessary equipment, ~~usually~~ consisting of a circuit breaker(s) or switch(es) and fuse(s) and their accessories, connected to the ~~load end of service conductors to a building or other structure, or an otherwise designated area,~~utility electric system and intended to constitute the main control and ~~cutoff~~disconnect of the ~~supply~~utility electric system. (~~CMP-4~~CMP-10)

Submitter Information Verification

Submitter Full Name: NEC-CMP Panel 10

Committee:

Submittal Date: Mon Jan 15 12:48:37 EST 2018

Committee Statement

Committee Statement: This revision clarifies that "service equipment" connects to the utility electric system which may be service conductors or a service lateral. The word "usually" is deleted because service equipment always consists of a circuit breaker(s) or switch(es) and fuse(s). The word "cutoff" is deleted and replaced with "disconnect" for clarity.

Response Message: FR-8199-NFPA 70-2018

Public Input No. 311-NFPA 70-2017 [Definition: Service Equipment.]
Public Input No. 3308-NFPA 70-2017 [Definition: Service Equipment.]

Ballot Results

This item has passed ballot

x

12 Eligible Voters

0 Not Returned

12 Affirmative All

0 Affirmative with Comments

0 Negative with Comments

0 Abstention

X

Affirmative All

Barnhart, Paul D.
Blizard, Scott A.
Burns, Julian R.
Carter, Charles Robert
Dollard, Jr., James T.

Fredericks, Carl
Koepke, Ed
Rempe, Kenneth J.
Saporita, Vincent J.
Townsend, Steven E.
Vance, Christopher R.
Williams, David A.

Public Input No. 329-NFPA 70-2020 [Section No. 513.3(D)]

(D) Areas Suitably ~~Cut Off and~~ Separated and Ventilated.

Adjacent areas in which flammable liquids or vapors are not likely to be released, such as stock rooms, electrical control rooms, and other similar locations, shall be unclassified where mechanically ventilated at a rate of four or more air changes per hour, or designed with positive air pressure, or where effectively ~~cut off from~~ separated from the hangar itself by walls or partitions.

Additional Proposed Changes

File Name	Description	Approved
2020_FR_8199_replaces_cut_off_with_disconnect_in_service_equip_definition.docx	2020 NEC FR 8199	

Statement of Problem and Substantiation for Public Input

This PI requests that the term "cut off" be replaced with "separated" which more accurately describes the condition.
The following link provides a definition of "separate": https://www.merriam-webster.com/dictionary/separate
Definition of separate:
transitive verb
1a: to set or keep apart
b: to make a distinction between
2archaic : to set aside for a special purpose
3: to part by a legal separation:
4: to block off
5a: to isolate from a mixture
b: to divide into constituent parts
intransitive verb
1: to become divided or detached
adjective
1a: set or kept apart
2a: not shared with another
3a: existing by itsellf

"Cut off" is a vague term. The NEC Style Manual states:
Paragraph 1.3 Regulatory Adoption
Because the NEC is intended to be suitable for adoption as a regulatory document, it is important that it contain clearly stated mandatory requirements in the Code text.

Paragraph 3.2.1 Unenforceable Terms
The NEC shall not contain references or requirements that are unenforceable or vague.

Paragraph 3.3.4 Word Clarity
Words and terms used in the NEC shall be specific and clear in meaning, and shall avoid jargon, trade terminology, industry specific terms, or colloquial language that is difficult to understand.

Also note that in the 2020 NEC revision cycle CMP 10 replaced the term "cut off" in the definition of service equipment. That action was taken in FR 8199 which is attached for reference.

Companion PI's submitted to correlate this proposed change are 340, 346, 347 and 348

Related Public Inputs for This Document

Related Input	Relationship
Public Input No. 340-NFPA 70-2020 [Section No. 511.3(C)]	
Public Input No. 346-NFPA 70-2020 [Section No. 511.3(D)]	
Public Input No. 347-NFPA 70-2020 [Section No. 511.3(E)(1)]	
Public Input No. 348-NFPA 70-2020 [Section No. 513.3(B)]	
Public Input No. 340-NFPA 70-2020 [Section No. 511.3(C)]	
Public Input No. 346-NFPA 70-2020 [Section No. 511.3(D)]	
Public Input No. 347-NFPA 70-2020 [Section No. 511.3(E)(1)]	
Public Input No. 348-NFPA 70-2020 [Section No. 513.3(B)]	

Submitter Information Verification

Submitter Full Name: Vincent Della Croce
Organization:
Street Address:
City:
State:
Zip:
Submittal Date: Tue Jan 21 13:56:19 EST 2020
Committee: NEC-P14

Committee Statement

Resolution: FR-8698-NFPA 70-2021
Statement: The words ‘cut off’ have been changed to ‘separated’ for clarity.

First Revision No. 8199-NFPA 70-2018 [Definition: Service Equipment.]

Service Equipment.

The necessary equipment, ~~usually~~ consisting of a circuit breaker(s) or switch(es) and fuse(s) and their accessories, connected to the ~~load end of service conductors to a building or other structure, or an otherwise designated area,~~utility electric system and intended to constitute the main control and ~~cutoff~~disconnect of the ~~supply~~utility electric system. (~~CMP-4~~CMP-10)

Submitter Information Verification

Submitter Full Name: NEC-CMP Panel 10

Committee:

Submittal Date: Mon Jan 15 12:48:37 EST 2018

Committee Statement

Committee Statement: This revision clarifies that "service equipment" connects to the utility electric system which may be service conductors or a service lateral. The word "usually" is deleted because service equipment always consists of a circuit breaker(s) or switch(es) and fuse(s). The word "cutoff" is deleted and replaced with "disconnect" for clarity.

Response Message: FR-8199-NFPA 70-2018

Public Input No. 311-NFPA 70-2017 [Definition: Service Equipment.]
Public Input No. 3308-NFPA 70-2017 [Definition: Service Equipment.]

Ballot Results

This item has passed ballot

x

12 Eligible Voters

0 Not Returned

12 Affirmative All

0 Affirmative with Comments

0 Negative with Comments

0 Abstention

X

Affirmative All

Barnhart, Paul D.
Blizard, Scott A.
Burns, Julian R.
Carter, Charles Robert
Dollard, Jr., James T.

Fredericks, Carl
Koepke, Ed
Rempe, Kenneth J.
Saporita, Vincent J.
Townsend, Steven E.
Vance, Christopher R.
Williams, David A.

Public Input No. 4539-NFPA 70-2020 [Section No. 513.4(A)]

(A) General.

All wiring and equipment that is or may be installed or operated within any of the Class I locations defined in 513.3 shall comply with the applicable provisions of ~~Article 501 or Article 505~~ - the Class I or Zone hazardous (classified) location requirements for the division or zone in which they are used.

Attachment plugs and receptacles in Class I locations shall be identified for Class I locations or shall be designed such that they cannot be energized while the connections are being made or broken.

Statement of Problem and Substantiation for Public Input

Section 4.1.4 of the 2020 NEC(r) Style Manual prohibits reference to an entire article, with the exception of Article 100. Replacing "Article 501 or 505" with the "Class I or Zone hazardous (classified) location requirements" seems to accomplish the objective without changing the intent of the Code.

Submitter Information Verification

Submitter Full Name: Richard Holub
Organization: The DuPont Company, Inc.
Street Address:
City:
State:
Zip:
Submittal Date: Thu Sep 10 14:50:40 EDT 2020
Committee: NEC-P14

Committee Statement

Resolution: FR-8736-NFPA 70-2021

Statement: Section 4.1.4 of the 2020 NEC Style Manual prohibits reference to an entire article, with the exception of Article 100. Replacing "Article 501 or 505" with the "Class I or Zone hazardous (classified) location requirements" accomplishes the objective without changing the intent of the Code. Additional revisions have been made for clarity and usability.

Public Input No. 4551-NFPA 70-2020 [Section No. 513.4(B)]

(B) Stanchions, Rostrums, and Docks.

Electrical wiring, outlets, and equipment (including lamps) on or attached to stanchions, rostrums, or docks that are located or likely to be located in a Class I location, as defined in 513.3(C), shall comply with the applicable provisions of Part II or Part III of Article 501 or ~~Article~~ 505 .15 through 505.26 for the division or zone in which they are used.

Statement of Problem and Substantiation for Public Input

Section 4.1.4 of the 2020 NEC(r) Style Manual prohibits reference to an entire article, with the Exception of Article 100. As such, it is recommended to point to "Part II or Part III of Article 501 or 505.15 through 505.26" in lieu of the previous pointers to the entire Article 501 and 505 to comply. This proposal is not intended to change the previous code requirement.

Submitter Information Verification

Submitter Full Name: Richard Holub
Organization: The DuPont Company, Inc.
Street Address:
City:
State:
Zip:
Submittal Date: Thu Sep 10 15:00:50 EDT 2020
Committee: NEC-P14

Committee Statement

Resolution: FR-8737-NFPA 70-2021

Statement: Section 4.1.4 of the 2020 NEC(r) Style Manual prohibits reference to an entire article, with the Exception of Article 100. As such, it is recommended to point to "Part II or Part III of Article 501 or 505.15 through 505.26" in lieu of the previous pointers to the entire Article 501 and 505 to comply. This proposal is not intended to change the previous code requirement. Additional revisions have been made for clarity and usability.

Public Input No. 4580-NFPA 70-2020 [Section No. 513.10(B)]

(B) Aircraft Battery Charging and Equipment.

Battery chargers and their control equipment shall not be located or operated within any of the Class I locations defined in 513.3 and shall preferably be located in a separate building or in an area such as defined in 513.3(D). Mobile chargers shall carry at least one permanently affixed warning sign with the following words or equivalent:

WARNING

KEEP 5 FT CLEAR OF AIRCRAFT ENGINES

AND FUEL TANK AREAS

or

WARNING

KEEP 1.5 METERS CLEAR OF AIRCRAFT

ENGINES AND FUEL TANK AREAS

Tables, racks, trays, and wiring shall not be located within a Class I location and, in addition, shall comply with ~~Article~~ 480. 9 and 480.10. .

Statement of Problem and Substantiation for Public Input

Section 4.1.4 of the NEC(r) Style Manual prohibits references to an entire article, with the exception of Article 100. As such, it is recommended to revise this section to point the user to Sections 480.9 and 480.10 as they seem to be the applicable sections to correlate with the current requirement. This change should be editorial and not change the overall requirement, here. The CMP is encouraged to carefully review to ensure that intent is met.

Submitter Information Verification

Submitter Full Name: Richard Holub

Organization: The DuPont Company, Inc.

Street Address:

City:

State:

Zip:

Submittal Date: Thu Sep 10 15:22:07 EDT 2020

Committee: NEC-P14

Committee Statement

Resolution: FR-8735-NFPA 70-2021

Statement: Section 4.1.4 of the NEC(r) Style Manual prohibits references to an entire article, with the exception of Article 100. As such, it is recommended to revise this section to point the user to Sections 480.9 and 480.10. This change is intended to be editorial and not change the overall requirement, here.The word “preferably” is not enforceable and is thus removed.

Public Input No. 2813-NFPA 70-2020 [Section No. 514.3(B)(1)]

(1) Class I Locations.

Table 514.3(B)(1) shall be applied where Class I liquids are stored, handled, or dispensed and shall be used to delineate and classify motor fuel dispensing facilities and commercial garages as defined in Article 511. Table 515.3 shall be used for the purpose of delineating and classifying aboveground tanks. A Class I location shall not extend beyond an unpierced wall, roof, or other solid partition. [**30A:**8.1, 8.2, 8.3]

Table 514.3(B)(1) Class I Locations — Motor Fuel Dispensing Facilities

Location	Division (Group D)	Zone (Group IIA)	Extent of Classified Location[1]	
Dispensing Device (except Overhead Type)[2, 3]	-	-	-	
Under dispenser containment	1	1	Entire space within and under dispenser pit or containment	
Dispenser	2	2	Within 450 mm (18 in.) of dispenser enclosure or that portion of dispenser enclosure containing liquid-handling components, extending horizontally in all directions and down to grade level	
Outdoor	2	2	Up to 450 mm (18 in.) above grade level, extending 6 m (20 ft) horizontally in all directions from dispenser enclosure	
Indoor	-	-	-	
- with mechanical ventilation	2	2	Up to 450 mm (18 in.) above floor level, extending 6 m (20 ft) horizontally in all directions from dispenser enclosure	
- with gravity ventilation	2	2	Up to 450 mm (18 in.) above floor level, extending 7.5 m (25 ft) horizontally in all directions from dispenser enclosure	
Dispensing Device — Overhead Type[4]	1	1	Space within dispenser enclosure and all electrical equipment integral with dispensing hose or nozzle	
	-	2	2	Within 450 mm (18 in.) of dispenser enclosure, extending horizontally in all directions and down to grade level

Location	Division (Group D)	Zone (Group IIA)	Extent of Classified Location[1]	
	-	2	2	Up to 450 mm (18 in.) above grade level, extending 6 m (20 ft) horizontally in all directions from a point vertically below edge of dispenser enclosure
Remote Pump —	-	-	-	
Outdoor	1	1	Entire space within any pit or box below grade level, any part of which is within 3 m (10 ft) horizontally from any edge of pump	
	-	2	2	Within 900 mm (3 ft) of any edge of pump, extending horizontally in all directions
	-	2	2	Up to 450 mm (18 in.) above grade level, extending 3 m (10 ft) horizontally in all directions from any edge of pump
Indoor	1	1	Entire space within any pit	
	-	2	2	Within 1.5 m (5 ft) of any edge of pump, extending in all directions
	-	2	2	Up to 900 mm (3 ft) above floor level, extending 7.5 m (25 ft) horizontally in all directions from any edge of pump
	unclassified	unclassified	Except as noted below	
Sales, Storage, Rest Rooms including structures (such as the attendant's kiosk) on or adjacent to dispensers	1	1	Entire volume, if there is any opening to room within the extent of a Division 1 or Zone 1 location	
	2	2	Entire volume up to 18 inch , if there is any opening to room within the extent of a Division 2 or Zone 2 location	
Tank, Aboveground	-	-	-	
Inside tank	1	0	Entire inside volume	

Location	Division (Group D)	Zone (Group IIA)	Extent of Classified Location[1]	
Shell, ends, roof, dike area	1	1	Entire space within dike, where dike height exceeds distance from tank shell to inside of dike wall for more than 50 percent of tank circumference	
	-	2	2	Entire space within dike, where dike height does not exceed distance from tank shell to inside of dike wall for more than 50 percent of tank circumference
Vent	2	2	Within 3 m (10 ft) of shell, ends, or roof of tank	
	-	1	1	Within 1.5 m (5 ft) of open end of vent, extending in all directions
	-	2	2	Between 1.5 m and 3 m (5 ft and 10 ft) from open end of vent, extending in all directions
Tank, Underground	-	-	-	
Inside tank	1	0	Entire inside volume	
Fill Opening	1	1	Entire space within any pit or box below grade level, any part of which is within a Division 1 or Division 2 classified location or within a Zone 1 or Zone 2 classified location	
	-	2	2	Up to 450 mm (18 in.) above grade level, extending 1.5 m (5 ft) horizontally in all directions from any tight-fill connection and extending 3 m (10 ft) horizontally in all directions from any loose-fill connection
Vent	1	1	Within 1.5 m (5 ft) of open end of vent, extending in all directions	

Location	Division (Group D)	Zone (Group IIA)	Extent of Classified Location[1]	
	-	2	2	Between 1.5 m and 3 m (5 ft and 10 ft) from open end of vent, extending in all directions
Vapor Processing System	-	-	-	
Pits	1	1	Entire space within any pit or box below grade level, any part of which: (1) is within a Division 1 or Division 2 classified location; (2) is within a Zone 1 or Zone 2 classified location; (3) houses any equipment used to transfer or process vapors	
Equipment in protective enclosures	2	2	Entire space within enclosure	
Equipment *not* within protective enclosure	2	2	Within 450 mm (18 in.) of equipment containing flammable vapors or liquid, extending horizontally in all directions and down to grade level	
	-	2	2	Up to 450 mm (18 in.) above grade level within 3 m (10 ft) horizontally of the vapor processing equipment
- Equipment enclosure	1	1	Entire space within enclosure, if flammable vapor or liquid is present under normal operating conditions	
	-	2	2	Entire space within enclosure, if flammable vapor or liquid is not present under normal operating conditions
- Vacuum assist blower	2	2	Within 450 mm (18 in.) of blower, extending horizontally in all directions and down to grade level	
	-	2	2	Up to 450 mm (18 in.) above grade level, extending 3 m (10 ft) horizontally in all

Location	Division (Group D)	Zone (Group IIA)	Extent of Classified Location[1] directions
Vault	1	1	Entire interior space, if Class I liquids are stored within

[1]For marine application, *grade level* means the surface of a pier, extending down to water level.

[2]Refer to Figure 514.3 and Figure 514.3(B) for an illustration of classified location around dispensing devices.

[3]Area classification inside the dispenser enclosure is covered in UL 87, *Standard for Power-Operated Dispensing Devices for Petroleum Products*.

[4]Ceiling-mounted hose reel. [**30A:**Table 8.3.1]

Additional Proposed Changes

File Name	Description	Approved
PI_2813_Attachment_1_C_.pdf		

Statement of Problem and Substantiation for Public Input

gas attendant kiosks are typically moular IBC labeled prewired units that consist of an electrical panel, switch, receptacles, communication and at a minimum some type of heating/AC, when they are installed on the dispensing island they are within the 20ft/18 in measurement per figure 514.3. I have attached a picture of a typical gas attendant kiosk, per the NEC this kiosk would be a violation if is any electrical equipment or devices in the kiosk did not comply with class 1 div 2 requirements. The word opening also needs to be defined, for example is a door considered to be an opening?

Submitter Information Verification

Submitter Full Name: Michael Dempsey
Organization: trinity code inspections
Street Address:
City:
State:
Zip:
Submittal Date: Tue Sep 01 15:32:06 EDT 2020
Committee: NEC-P14

Committee Statement

Resolution: The recommendation attempts to validate a non-compliant installation. The enclosed space within the classified area dictated by the figure should not be modified as potential gas releases in the area would not be limited to the 18” proposed inside the enclosed area. While there may be additional provisions such as ventilation to allow unclassified equipment within the space, these were not identified in the recommendation.

Gulf
CREDIT
2
3
4
RIGHT TURN ONLY

Public Input No. 4588-NFPA 70-2020 [Section No. 514.3(B)(1)]

(1) Class I Locations.

Table 514.3(B)(1) shall be applied where Class I liquids are stored, handled, or dispensed and shall be used to delineate and classify motor fuel dispensing facilities and commercial garages as defined in Article ~~511~~ 100 . Table 515.3 shall be used for the purpose of delineating and classifying aboveground tanks. A Class I location shall not extend beyond an unpierced wall, roof, or other solid partition. [**30A:**8.1, 8.2, 8.3]

Table 514.3(B)(1) Class I Locations — Motor Fuel Dispensing Facilities

Location	Division (Group D)	Zone (Group IIA)	Extent of Classified Location[1]	
Dispensing Device (except Overhead Type) [2, 3]	-	-	-	
Under dispenser containment	1	1	Entire space within and under dispenser pit or containment	
Dispenser	2	2	Within 450 mm (18 in.) of dispenser enclosure or that portion of dispenser enclosure containing liquid-handling components, extending horizontally in all directions and down to grade level	
Outdoor	2	2	Up to 450 mm (18 in.) above grade level, extending 6 m (20 ft) horizontally in all directions from dispenser enclosure	
Indoor	-	-	-	
- with mechanical ventilation	2	2	Up to 450 mm (18 in.) above floor level, extending 6 m (20 ft) horizontally in all directions from dispenser enclosure	
- with gravity ventilation	2	2	Up to 450 mm (18 in.) above floor level, extending 7.5 m (25 ft) horizontally in all directions from dispenser enclosure	
Dispensing Device — Overhead Type[4]	1	1	Space within dispenser enclosure and all electrical equipment integral with dispensing hose or nozzle	
	-	2	2	Within 450 mm (18 in.) of dispenser enclosure, extending horizontally in all directions and down to grade level

Location	Division (Group D)	Zone (Group IIA)	Extent of Classified Location[1]	
	-	2	2	Up to 450 mm (18 in.) above grade level, extending 6 m (20 ft) horizontally in all directions from a point vertically below edge of dispenser enclosure
Remote Pump —	-	-	-	
Outdoor	1	1	Entire space within any pit or box below grade level, any part of which is within 3 m (10 ft) horizontally from any edge of pump	
	-	2	2	Within 900 mm (3 ft) of any edge of pump, extending horizontally in all directions
	-	2	2	Up to 450 mm (18 in.) above grade level, extending 3 m (10 ft) horizontally in all directions from any edge of pump
Indoor	1	1	Entire space within any pit	
	-	2	2	Within 1.5 m (5 ft) of any edge of pump, extending in all directions
	-	2	2	Up to 900 mm (3 ft) above floor level, extending 7.5 m (25 ft) horizontally in all directions from any edge of pump
	unclassified	unclassified	Except as noted below	
Sales, Storage, Rest Rooms including structures (such as the attendant's kiosk) on or adjacent to dispensers	1	1	Entire volume, if there is any opening to room within the extent of a Division 1 or Zone 1 location	
	2	2	Entire volume, if there is any opening to room within the extent of a Division 2 or Zone 2 location	
Tank, Aboveground	-	-	-	
Inside tank	1	0	Entire inside volume	

Location	Division (Group D)	Zone (Group IIA)	Extent of Classified Location[1]	
Shell, ends, roof, dike area	1	1	Entire space within dike, where dike height exceeds distance from tank shell to inside of dike wall for more than 50 percent of tank circumference	
	-	2	2	Entire space within dike, where dike height does not exceed distance from tank shell to inside of dike wall for more than 50 percent of tank circumference
Vent	2	2	Within 3 m (10 ft) of shell, ends, or roof of tank	
	-	1	1	Within 1.5 m (5 ft) of open end of vent, extending in all directions
	-	2	2	Between 1.5 m and 3 m (5 ft and 10 ft) from open end of vent, extending in all directions
Tank, Underground	-	-	-	
Inside tank	1	0	Entire inside volume	
Fill Opening	1	1	Entire space within any pit or box below grade level, any part of which is within a Division 1 or Division 2 classified location or within a Zone 1 or Zone 2 classified location	
	-	2	2	Up to 450 mm (18 in.) above grade level, extending 1.5 m (5 ft) horizontally in all directions from any tight-fill connection and extending 3 m (10 ft) horizontally in all directions from any loose-fill connection
Vent	1	1	Within 1.5 m (5 ft) of open end of vent, extending in all directions	

Location	Division (Group D)	Zone (Group IIA)	Extent of Classified Location[1]	
	-	2	2	Between 1.5 m and 3 m (5 ft and 10 ft) from open end of vent, extending in all directions
Vapor Processing System	-	-	-	
Pits	1	1	Entire space within any pit or box below grade level, any part of which: (1) is within a Division 1 or Division 2 classified location; (2) is within a Zone 1 or Zone 2 classified location; (3) houses any equipment used to transfer or process vapors	
Equipment in protective enclosures	2	2	Entire space within enclosure	
Equipment *not* within protective enclosure	2	2	Within 450 mm (18 in.) of equipment containing flammable vapors or liquid, extending horizontally in all directions and down to grade level	
	-	2	2	Up to 450 mm (18 in.) above grade level within 3 m (10 ft) horizontally of the vapor processing equipment
- Equipment enclosure	1	1	Entire space within enclosure, if flammable vapor or liquid is present under normal operating conditions	
	-	2	2	Entire space within enclosure, if flammable vapor or liquid is not present under normal operating conditions
- Vacuum assist blower	2	2	Within 450 mm (18 in.) of blower, extending horizontally in all directions and down to grade level	
	-	2	2	Up to 450 mm (18 in.) above grade level, extending 3 m (10 ft) horizontally in all

Location	Division (Group D)	Zone (Group IIA)	Extent of Classified Location[1]	directions
Vault	1	1	Entire interior space, if Class I liquids are stored within	

[1]For marine application, *grade level* means the surface of a pier, extending down to water level.

[2]Refer to Figure 514.3 and Figure 514.3(B) for an illustration of classified location around dispensing devices.

[3]Area classification inside the dispenser enclosure is covered in UL 87, *Standard for Power-Operated Dispensing Devices for Petroleum Products*.

[4]Ceiling-mounted hose reel. [**30A:**Table 8.3.1]

Statement of Problem and Substantiation for Public Input

Section 4.1.4 of the NEC(r) Style Manual prohibits references to an entire article, with the exception of Article 100. It so happens the definitions were moved in the 2020 NEC(r) Code Cycle to Article 100 so this section needs to be revised as shown to correlate with changes already made to the Code as well as the Style Manual.

Submitter Information Verification

Submitter Full Name: Richard Holub
Organization: The DuPont Company, Inc.
Street Address:
City:
State:
Zip:
Submittal Date: Thu Sep 10 15:29:28 EDT 2020
Committee: NEC-P14

Committee Statement

Resolution: FR-8488-NFPA 70-2021
Statement: The reference has been changed to Article 100 for compliance with the NEC Style Manual.

Public Input No. 3753-NFPA 70-2020 [Sections 514.3(C), 514.3(D), 514.3(E)]

Sections 514.3(C), 514.3(D), 514.3(E)

(C) Motor Fuel Dispensing Stations in Boatyards and Marinas.

Informational Note: For additional information, see NFPA 303-2016, *Fire Protection Standard for Marinas and Boatyards*, and NFPA 30A-2018, *Code for Motor Fuel Dispensing Facilities and Repair Garages*.

(1) General.

Electrical wiring and equipment located at or serving motor fuel dispensing locations shall be installed on the side of the wharf, pier, or dock opposite from the liquid piping system.

(2) Classification of Class I, Division 1 and 2 Areas.

The following criteria shall be used for the purposes of applying Table 514.3(B)(1) and Table 514.3(B)(2) to motor fuel dispensing equipment on floating or fixed piers, wharfs, or docks.

(~~D~~ 3) Closed Construction.

Where the construction of floating docks, piers, or wharfs is closed so that there is no space between the bottom of the dock, pier, or wharf and the water, as in the case of concrete-enclosed expanded foam or similar construction, and the construction includes integral service boxes with supply chases, the following shall apply:

(1) The space above the surface of the floating dock, pier, or wharf shall be a Class I, Division 2 location with distances as specified in Table 514.3(B)(1) for dispenser and outdoor locations.

(2) Spaces below the surface of the floating dock, pier, or wharf that have areas or enclosures, such as tubs, voids, pits, vaults, boxes, depressions, fuel piping chases, or similar spaces, where flammable liquid or vapor can accumulate shall be a Class I, Division 1 location.

Exception No. 1: Dock, pier, or wharf sections that do not support fuel dispensers and abut, but are located 6.0 m (20 ft) or more from, dock sections that support a fuel dispenser(s) shall be permitted to be Class I, Division 2 locations where documented air space is provided between dock sections to allow flammable liquids or vapors to dissipate without traveling to such dock sections. The documentation shall comply with 500.4.

Exception No. 2: Dock, pier, or wharf sections that do not support fuel dispensers and do not directly abut sections that support fuel dispensers shall be permitted to be unclassified where documented air space is provided and where flammable liquids or vapors cannot travel to such dock sections. The documentation shall comply with 500.4.

(~~E~~ 4) Open Construction.

Where the construction of piers, wharfs, or docks is open, as in the case of decks built on stringers supported by pilings, floats, pontoons, or similar construction, the following shall apply:

(1) The area 450 mm (18 in.) above the surface of the dock, pier, or wharf and extending 6.0 m (20 ft) horizontally in all directions from the outside edge of the dispenser and down to the water level shall be a Class 1, Division 2 location.

(2) Enclosures such as tubs, voids, pits, vaults, boxes, depressions, piping chases, or similar spaces where flammable liquids or vapors can accumulate within 6.0 m (20 ft) of the dispenser shall be a Class I, Division 1 location.

Statement of Problem and Substantiation for Public Input

Subsections (D) and (E) apply only to the installations described in (C) and should therefore be incorporated in (C).

Submitter Information Verification

Submitter Full Name: Ryan Jackson
Organization: Ryan Jackson
Street Address:
City:
State:
Zip:
Submittal Date: Wed Sep 09 11:51:08 EDT 2020
Committee: NEC-P14

Committee Statement

Resolution: FR-8489-NFPA 70-2021
Statement: The revision properly aligns former (D) and (E) with 514.3(C)(2).

Public Input No. 4593-NFPA 70-2020 [Section No. 514.4]

514.4 Wiring and Equipment Installed in Class I Locations.

All electrical equipment and wiring installed in Class I locations as classified in 514.3 shall comply with ~~the applicable provisions~~ Part II and Part III of Article 501.

Exception: As permitted in 514.8.

Informational Note: For special requirements for conductor insulation, see 501.20.

Statement of Problem and Substantiation for Public Input

Section 4.1.4 of the NEC(r) Style Manual prohibits references to an entire article, with the exception of Article 100. The wiring and equipment provisions of Article 501 are contained in Part II and Part III respectively so it is recommended to point there to comply with the Style Manual.

Submitter Information Verification

Submitter Full Name: Richard Holub
Organization: The DuPont Company, Inc.
Street Address:
City:
State:
Zip:
Submittal Date: Thu Sep 10 15:32:39 EDT 2020
Committee: NEC-P14

Committee Statement

Resolution: FR-8564-NFPA 70-2021

Statement: This section references an entire article of the NEC in violation of Section 4.1.4 of the NEC Style Manual. The revised reference to Parts II and III corrects the problem. The wiring and equipment provisions of Article 501 are found in these parts. The exception is changed to positive text for effectiveness. The informational note was revised. The informational which makes a recommendation is converted to positive text to comply with Section 3.1.3 of the NEC Style Manual.

Public Input No. 3170-NFPA 70-2020 [Section No. 514.7]

514.7 Wiring and Equipment Above Class I Locations.

~~Wiring and equipment above the Class I locations as classified in 514.3 shall comply with 511.7 .~~

All fixed wiring above Class I locations shall comply with be installed as permitted in 501.10(B). Cellular metal floor raceways or cellular concrete floor raceways shall be permitted to be used only for supplying ceiling outlets or extensions to the area below the floor, but such raceways shall have no connections leading into or through any Class I location above the floor.

Statement of Problem and Substantiation for Public Input

Section 514.7 currently refers to 511.7 for the wiring methods above Class I locations. PI 3168 proposes to make a reference to 501.10(B) for the wiring methods. The proposed change in this PI would make this text consistent with the proposed text of 511.7(A).

Related Public Inputs for This Document

Related Input	Relationship
Public Input No. 3168-NFPA 70-2020 [Section No. 511.7(A)(1)]	
Public Input No. 3167-NFPA 70-2020 [Section No. 515.7(A)]	
Public Input No. 3175-NFPA 70-2020 [Section No. 516.7(A)]	
Public Input No. 3204-NFPA 70-2020 [Section No. 516.38(A)]	

Submitter Information Verification

Submitter Full Name: John Simmons
Organization: Florida East Coast JATC
Street Address:
City:
State:
Zip:
Submittal Date: Sun Sep 06 14:12:02 EDT 2020
Committee: NEC-P14

Committee Statement

Resolution: FR-8566-NFPA 70-2021

Statement: The permitted wiring methods should not be located in another article. Having the wiring means in the article that requires them makes the section clearer. The panel did that the subdivision contains a long list of approved wiring methods, in paragraph format. Section 3.3.2 of the NEC Style Manual states that lists or tables should be used rather than long text descriptions.

Public Input No. 3557-NFPA 70-2020 [Section No. 514.8]

514.8 Underground Wiring.

Underground wiring shall be installed in threaded rigid metal conduit or threaded steel intermediate metal conduit. Any portion of electrical wiring that is below the surface of a Class I, Division 1 or a Class I, Division 2 location [as classified in Table 514.3(B)(1) and Table 514.3(B)(2)] shall be sealed within 3.05 m (10 ft) of the point of emergence above grade. Except for listed explosionproof reducers at the conduit seal, there shall be no union, coupling, box, or fitting between the conduit seal and the point of emergence above grade. Refer to Table 300.5.

Exception No. 1: Type MI cable shall be permitted where it is installed in accordance with Article 332.

Exception No. 2: Type PVC conduit, Type RTRC conduit, and Type HDPE conduit shall be permitted where buried under not less than 600 mm (2 ft) of cover. Where Type PVC conduit, ~~Type RTRC conduit,~~ or Type HDPE conduit is used, threaded rigid metal conduit or threaded steel intermediate metal conduit shall be used for the last 600 mm (2 ft) of the underground run to emergence or to the point of connection to the aboveground raceway, and an equipment grounding conductor shall be included to provide electrical continuity of the raceway system and for grounding of non–current-carrying metal parts.

Statement of Problem and Substantiation for Public Input

Type RTRC-XW conduit has proven to be effective when used in Division 2 locations. It is anticipated that the conduit will be listed as explosionproof. UL 1203 covers non-metal explosionproof electrical enclosures. There is no need to transform to metal conduit for the final 2 feet. See Public Input No. 2643-NFPA 70-2020 [Section No. 501.10(A)(1)]

Submitter Information Verification

Submitter Full Name: Tom Guida
Organization: Tjg Services Inc
Affiliation: Champion Fiberglass Inc.
Street Address:
City:
State:
Zip:
Submittal Date: Tue Sep 08 22:34:01 EDT 2020
Committee: NEC-P14

Committee Statement

Resolution: The substantiation indicates that it is anticipated that RTRC conduit will be listed as explosionproof in UL 1203. The panel believes that the proposed change to 514.8 should be addressed when UL lists the raceway as explosionproof.

Public Input No. 4596-NFPA 70-2020 [Section No. 514.8]

514.8 Underground Wiring.

Underground wiring shall be installed in threaded rigid metal conduit or threaded steel intermediate metal conduit. Any portion of electrical wiring that is below the surface of a Class I, Division 1 or a Class I, Division 2 location [as classified in Table 514.3(B)(1) and Table 514.3(B)(2)] shall be sealed within 3.05 m (10 ft) of the point of emergence above grade. Except for listed explosionproof reducers at the conduit seal, there shall be no union, coupling, box, or fitting between the conduit seal and the point of emergence above grade. Refer to Table 300.5.

Exception No. 1: Type MI cable shall be permitted where it is installed in accordance with Part II of Article 332.

Exception No. 2: Type PVC conduit, Type RTRC conduit, and Type HDPE conduit shall be permitted where buried under not less than 600 mm (2 ft) of cover. Where Type PVC conduit, Type RTRC conduit, or Type HDPE conduit is used, threaded rigid metal conduit or threaded steel intermediate metal conduit shall be used for the last 600 mm (2 ft) of the underground run to emergence or to the point of connection to the aboveground raceway, and an equipment grounding conductor shall be included to provide electrical continuity of the raceway system and for grounding of non–current-carrying metal parts.

Statement of Problem and Substantiation for Public Input

Section 4.1.4 of the NEC(r) Style Manual prohibits references to an entire article, with the exception of Article 100. Installation requirements for Type MI cable are found in Part II of that article so the reference is updated as such to comply with the Style Manual.

Submitter Information Verification

Submitter Full Name: Richard Holub
Organization: The DuPont Company, Inc.
Street Address:
City:
State:
Zip:
Submittal Date: Thu Sep 10 15:35:39 EDT 2020
Committee: NEC-P14

Committee Statement

Resolution: FR-8569-NFPA 70-2021

Statement: The panel revised the section by converting two exceptions to positive code text. The reference to an entire Article (NEC Style Manual Section 4.1.4) is corrected. The change expresses the principle more effectively and complies with the guidance provided in Section 3.1.4 of the NEC Style Manual. The reference to Table 300.5 is unnecessary and removed from the text. The changes add clarity to the section.

Public Input No. 820-NFPA 70-2020 [Section No. 514.8]

514.8 Underground Wiring.

Underground wiring shall be installed in threaded rigid metal conduit or threaded steel intermediate metal conduit. Any portion of electrical wiring that is below the surface of a Class I, Division 1 or a Class I, Division 2 location [as classified in Table 514.3(B)(1) and Table 514.3(B)(2)] shall be sealed within 3.05 m (10 ft) of the point of emergence above grade. Except for listed explosionproof reducers at the conduit seal, there shall be no union, coupling, box, or fitting between the conduit seal and the point of emergence above grade. Refer to Table 300.5.

Exception No. 1: Type MI cable shall be permitted where it is installed in accordance with Article 332.

Exception No. 2:- - Type PVC conduit, Type RTRC conduit, ~~and~~ Type HDPE conduit, and tpyes RMC and IMC with threadless fittings shall be permitted where buried under not less than 600 mm (2 ft) of cover. Where Type PVC conduit, Type RTRC conduit, or Type HDPE conduit is used, threaded rigid metal conduit or threaded steel intermediate metal conduit shall be used for the last 600 mm (2 ft) of the underground run to emergence or to the point of connection to the aboveground raceway, and an equipment grounding conductor shall be included to provide electrical continuity of the raceway system and for grounding of non–current-carrying metal parts.

Statement of Problem and Substantiation for Public Input

It seems rather odd to allow PVC conduit and prohibit IMC or RMC with threadless fittings, especially in an unclassified area.

Submitter Information Verification

Submitter Full Name: Ryan Jackson
Organization: Ryan Jackson
Street Address:
City:
State:
Zip:
Submittal Date: Mon Mar 30 17:26:47 EDT 2020
Committee: NEC-P14

Committee Statement

Resolution: There is no submitter does not provide substantiation provided for the proposed revision. The addition of conduit types RMC and IMC in Exception No. 2 is unnecessary. Both conduit types are permitted in the parent text.

Public Input No. 2421-NFPA 70-2020 [Section No. 514.11(A)]

(A) Emergency Electrical Disconnects.

Fuel dispensing systems shall be provided with one or more clearly identified emergency shutoff devices or electrical disconnects. Such devices or disconnects shall be installed in approved locations but not less than 6 m (20 ft) or more than 30 m (100 ft) from the fuel dispensing devices ~~that they serve. Emergency~~ . Each fuel dispensing device shall have at least one Emergency Shutoff Device located at a distance of not less than 6 m (20 ft) or more than 30 m (100 ft). An Emergency Shutoff Device may be located nearer 6 m (20 ft) or more than 30 m (100 ft) as long as multiple devices are used and at least one such device is located within the required distances from each dispensing device. Emergency shutoff devices or electrical disconnects shall disconnect power to all dispensing devices; to all remote pumps serving the dispensing devices; to all associated power, control, and signal circuits; and to all other electrical equipment in the hazardous (classified) locations surrounding the fuel dispensing devices. When more than one emergency shutoff device or electrical disconnect is provided, all devices shall be interconnected. Resetting from an emergency shutoff condition shall require manual intervention and the manner of resetting shall be approved by the authority having jurisdiction. [**30A:**6.7] The emergency shutoff device shall disconnect simultaneously from the source of supply, all conductors of the circuits, including the grounded conductor, if any. Equipment grounding conductors shall remain connected.

*Exception: Intrinsically safe electrical equipment need not meet this requirement. [**30A:**6.7]*

Informational note 1: The intent of the locations of the Emergency Disconnect Device is to allow such devices closer to a dispensing device than described but still have another Emergency Disconnecting Device at the proper distance.

Additional Proposed Changes

File Name	Description	Approved
Proposed_2023_NEC_change.pdf	Graphic showing my proposed change	

Statement of Problem and Substantiation for Public Input

To eliminate confusion about emergency stop locations at a fueling facility with many fueling points. In some cases an emergency stop might be located next to one fueling position but is actually the correct distance away when serving another fueling position. In this scenario a switch may be located only 6' from dispenser #1 but is more than 20' and less than 100' from other dispensers in the line. I believe this arrangement meets the intent of the safety focus that every dispenser is served properly and safely.
Many fueling facilities have no building or other structure to attach an emergency stop switch to that would be more than 20' and less than 100' from every dispenser. One fuel retailer in Texas has as many as 60 fuel dispensers and they take up so much space it would be impossible to have a switch at the proper distances without this clarification.

Submitter Information Verification

Submitter Full Name: Ben Stallings
Organization: Fatboy Electric
Street Address:
City:
State:

Zip:

Submittal Date: Thu Aug 20 10:52:59 EDT 2020

Committee: NEC-P14

Committee Statement

Resolution: This PI does not provide substantiation for the proposed revision. This proposal would have to be submitted as a public input for the next revision of NFPA 30A since the text in 514.11(A) is extracted from that document.

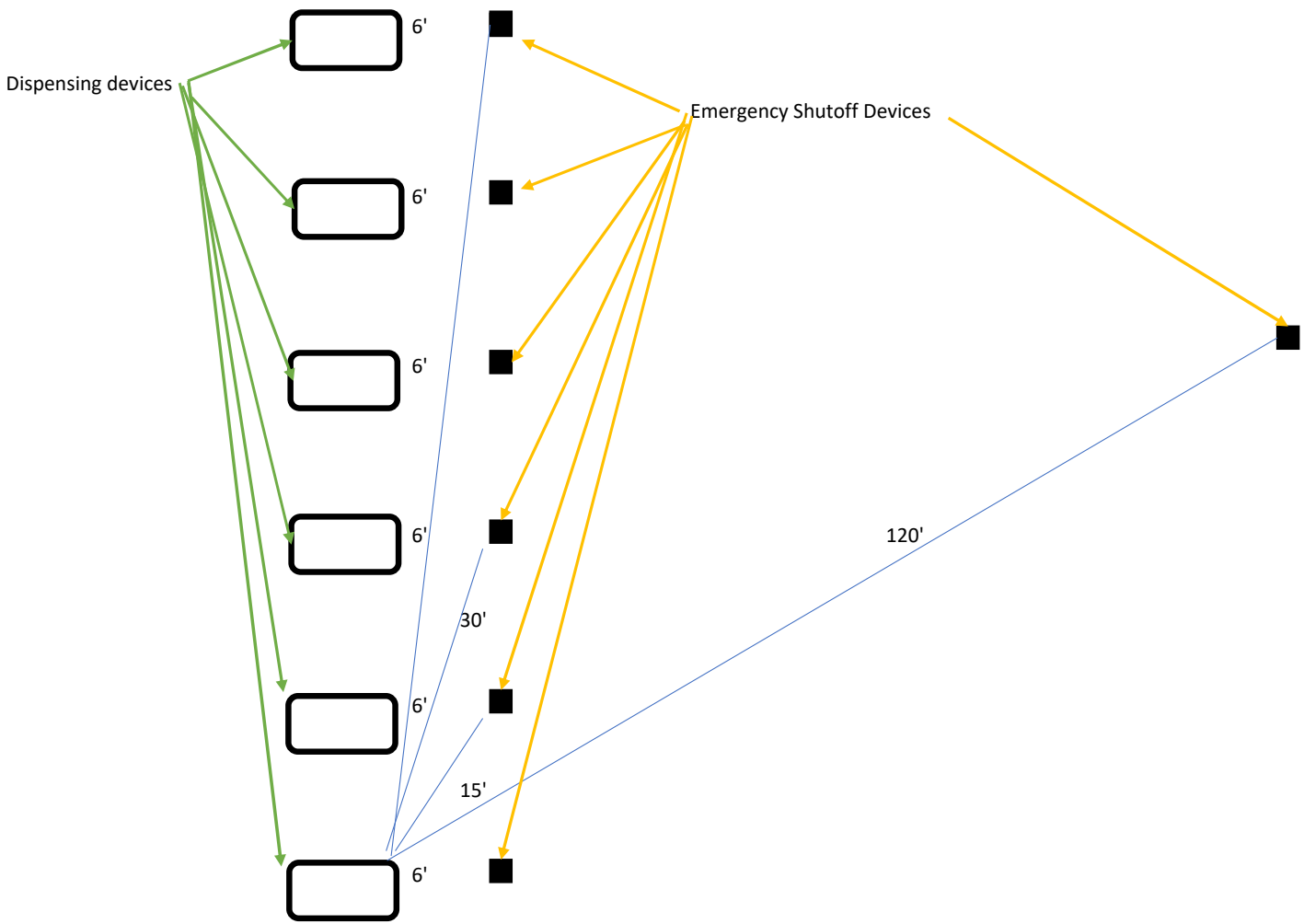

This disgram shows a line of dispensing units with an Emergency Shutoff Device with 6' of each.
It also shows an Emergency Shutoff Device more than 20' and less than 100' from each.
Under my proposed change this would be an acceptable installation.
This is in fact the reality of these installations in use today. I would like the language
changed to show to and Authority Having Jurisdiction that this is in fact acceptable.

Public Input No. 1880-NFPA 70-2020 [Section No. 514.11(C)]

(C) Unattended Self-Service Motor Fuel Dispensing Facilities.

At unattended motor fuel dispensing facilities, the devices or disconnects shall be readily accessible to patrons and at least one additional device or disconnect shall be readily accessible to each group ~~of dispensing devices on an individual island.~~ of dispensing devices, and shall comply with the requirements of 514.11. [**30A:**6.7.2]

Statement of Problem and Substantiation for Public Input

There is some confusion of the location of the additional disconnect required at unattended motor fuel dispensing stations.Some facilities in my state are installing the disconnects on each individual dispensing island within the 20' required distance of article 514.11(A)
I believe this would eliminate the confusion between the requirement. of 514.11(A) and 514.11(C)
I also believe this change would minimize the possibility of the public remaining in the area during an emergency situation to shut down the dispensers.
This change would also support exhibit 514.6 of the handbook.

Submitter Information Verification

Submitter Full Name: Ronnie Rouillard
Organization: electrical inspector
Affiliation: none
Street Address:
City:
State:
Zip:
Submittal Date: Mon Jul 13 12:57:47 EDT 2020
Committee: NEC-P14

Committee Statement

Resolution: The text in 514.11(C) is extracted from NFPA 30A. The revision proposed in the PI cannot be made by the NEC revision process.

Public Input No. 773-NFPA 70-2020 [New Section after 514.16]

TITLE OF NEW CONTENT

Type your content here ...

514.17 Electromagnetic Pulse (EMP) Protection. Protection for the manufacturing, production, transportation, distribution, sales, and business systems of motor fuel dispensing facilities against the effects of electromagnetic pulses shall be provided at a minimum of Level 1. See 709.7 for levels of electromagnetic pulse protection. This requirement shall become effective January 1, 2026.

Statement of Problem and Substantiation for Public Input

A devastating electromagnetic pulse (EMP), caused by a sun-spot or a nuclear bomb exploded high in the atmosphere, can impress 50,000 volts per meter on unprotected electrical and electronic equipment. It is similar to a radio wave impressing a very small voltage on a radio antenna, only orders of magnitude larger. The problem is that a significant EMP will fry every electrical/electronic component or piece of equipment that is not protected.

The EMP won't directly harm or injure people, but because there is no longer a working electrical infrastructure, which may take years to repair/rebuild, people will die from the lack of clean water, medicine, food, fuel, and eventual rioting due to the breakdown of society. Unclassified studies, referenced at the end of this substantiation, have estimated from 66% to 90% of the US population will die within one year if a significant sun spot were to occur or if a nuclear explosion were to occur 25 to 250 miles over the Midwest.

Our US military already "hardens" systems/buildings so that our country's critical defensive capabilities are not completely destroyed. There are two major methods of protecting electrical/electronic systems. The first is that surge protective devices are installed on all "incoming" power and communications cables, shunting overvoltages to ground. The second is that Faraday cages are installed around equipment/rooms, preventing the EMP from reaching critical equipment/components.

The NEC® needs to address EMP protection for equipment, systems and special occupancies that are critical to our survival. Electrical and electronic equipment can and must be protected, as has been achieved by our military. Unfortunately, there are no requirements to protect civilian electrical and electronic equipment/systems from EMPs.

The NEC Correlating Committee has informally advised that an EMP Protection Article, if passed and adopted into the NEC®, would be most appropriately located after Article 708 (COPS). Thus, Public Input 756 has suggested a new Article 709 under jurisdiction of CMP 13, which already has purview over Emergency Systems (Article 700), Legally Required Standby Systems (Article 701), Optional Standby Systems (Article 702), and Critical Operations Power Systems (Article 708).

Levels of protection and associated protection requirements listed in the Public Input(s) are based upon the unclassified National Cybersecurity and Communications Integration Center report "Electromagnetic Pulse (EMP) Protection and Resilience Guidelines for Critical Infrastructure and Equipment". This study explains electromagnetic pulses and provides the necessary protective measures. It also contains estimates of the costs associated with properly protecting our electrical infrastructure.
The following table contains critical infrastructure components/special occupancies and the maximum time for outages caused by an EMP. Electrical components/infrastructure that is not functioning for periods longer than shown in this table may begin to cause injury or death to people and harm to society/economy.

Critical Infrastructure Component/Special Occupancy	Permitted Outage Time
Branch banking facilities	10 hours

Critical Operations Power Systems 10 minutes
Data centers 10 minutes
Direct current microgrids 10 hours
Drug stores/distribution centers 10 hours
Electrically driven or controlled irrigation machines 1 week
Elevators, dumbwaiters, escalators, moving walks, platform lifts, and stairway chairlifts See facility requirements
Emergency systems 10 hours
Energy storage systems 10 hours
Fire alarm systems 1 week
Fire houses/stations 10 hours
Fire pumps 10 hours
Food processing and storage facilities 10 hours
Fuel cell systems 10 hours
Generators 10 hours
Grocery stores 10 hours
Hardware stores/home centers 10 hours
Healthcare facilities See NFPA 99
Information technology equipment 10 minutes
Interconnected electric power production sources 10 minutes
Jails and prisons 10 minutes
Large-scale photovoltaic (PV) electric supply stations 10 hours
Legally required standby systems 10 hours
Modular data centers 10 minutes
Motor fuel dispensing facilities 1 week
Motors, motor circuits, and controllers See facility requirements
Nuclear reactors 10 seconds
Optional standby systems 1 week
Petrochemical plants/facilities 10 hours
Pharmaceutical plants/facilities 10 hours
Police stations 10 minutes
Solar photovoltaic (PV) systems 10 hours
Stand-alone systems 10 hours
Storage batteries See facility requirements
Transformers See facility requirements
Waste water treatment facilities 10 minutes
Water supply facilities 10 hours
Wind electric systems 10 hours

An effectivity date of January 1, 2026 is chosen to allow time for engineering and industry to adequately pan and prepare for the required changes.

Opponents of EMP protection requirements will likely charge that it is too costly to protect our critical infrastructure, and that the NEC® is not a war-time document. A close reading of 90.1 reveals that there is no mention of the “cost” of safeguarding persons and property. Neither does 90.1 mention that safeguarding persons and property is only required during peacetime. Additionally, a significant EMP event, caused by a sunspot, would be an act of God, not an act of war.

The novel, “One Second After”, provides an understanding of what happens when the majority of all unprotected electrical and electronic equipment/systems is destroyed during an EMP event. An audio version of this book is available in two parts, for free, on YouTube.

This link provides the unclassified report “Electromagnetic Pulse (EMP) Protection and Resilience Guidelines for Critical Infrastructure and Equipment”
https://www.google.com/url?sa=t&rct=j&q=&esrc=s&source=web&cd=3&ved=2ahUKEwjQhp2-77DoAhXBHM0KHboOB2QQFjACegQIBRAC&url=https%3A%2F%2Fwww.cisa.gov%2Fsites%2Fdefault%2Ffiles%2Fpublications%2F19_0307_CISA_EMP-Protection-Resilience-Guidelines.pdf&usg=AOvVaw2n7jLtJAUJtOJKHPMqWsTE

This link provides the study predicting up to 90% of our population could die from an EMP event

http://www.firstempcommission.org/uploads/1/1/9/5/119571849
/nuclear_emp_attack_scenarios_and_combined-arms_cyber_warfare_by_peter_pry_july_2017.pdf

This link provides unclassified guidelines for facility EMP protection
https://info.publicintelligence.net/DHS-FacilitiesGuidelinesEMP.pdf

These links provide Parts 1 and 2 of a national plan for EMP protection.
https://interferencetechnology.com/a-national-plan-for-emp-protection-part-1/
https://interferencetechnology.com/national-plan-emp-protection-part-2-protection-buildings/

We have all just witnessed the chaos and pain caused by not having the “protections” in place to quickly defeat the Covid-19 virus. As unfortunate, costly, painful, and deadly as Covid-19 was, it would be child’s play when compared to a significant EMP event if our critical electrical/electronic infrastructure remains unprotected. Quite simply, NEC® requirements to protect electrical and electronic equipment from an EMP event, could literally save millions of American lives.

Related Public Inputs for This Document

Related Input	Relationship
Public Input No. 756-NFPA 70-2020 [New Section after 708.64]	
Public Input No. 756-NFPA 70-2020 [New Section after 708.64]	

Submitter Information Verification

Submitter Full Name: Vincent Saporita
Organization: Saporita Consulting
Affiliation: Saporita Consulting
Street Address:
City:
State:
Zip:
Submittal Date: Mon Mar 23 14:23:23 EDT 2020
Committee: NEC-P14

Committee Statement

Resolution: The scope of Article 514 covers electrical safety of installations from ignition of flammable or combustible materials. Requirements for continuity of operations are not covered by the scope of Article 514.

Public Input No. 4600-NFPA 70-2020 [Section No. 515.4]

515.4 Wiring and Equipment Located in Class I Locations.

All electrical wiring and equipment within the Class I locations defined in 515.3 shall comply with the applicable provisions ~~of Article 501 or Article 505~~ - the Class I or Zone hazardous (classified) location requirements for the division or zone in which they are used.

Exception:- ~~As permitted~~ Wiring methods allowed in 515.8 shall be permitted .

Statement of Problem and Substantiation for Public Input

Section 4.1.4 of the 2020 NEC(r) Style Manual prohibits reference to an entire article, with the exception of Article 100. Replacing "Article 501 or 505" with the "Class I or Zone hazardous (classified) location requirements" seems to accomplish the objective without changing the intent of the Code. Additionally, the exception is reworded in the form of a complete sentence as required in Section 3.1.4.1 of the NEC(r) Style Manual.

Submitter Information Verification

Submitter Full Name: Richard Holub
Organization: The DuPont Company, Inc.
Street Address:
City:
State:
Zip:
Submittal Date: Thu Sep 10 15:37:46 EDT 2020
Committee: NEC-P14

Committee Statement

Resolution: FR-8727-NFPA 70-2021

Statement: Section 4.1.4 of the 2020 NEC Style Manual prohibits reference to an entire article, with the exception of Article 100. Replacing "Article 501 or 505" with the "Class I or Zone hazardous (classified) location requirements" seems to accomplish the objective without changing the intent of the Code. Additionally, the exception is deleted and the intent is included in the requirement language as a permitted wiring method.

Public Input No. 3167-NFPA 70-2020 [Section No. 515.7(A)]

(A) Fixed Wiring.

All fixed wiring above ~~Class I~~ Class I locations shall comply with be installed as permitted in 501.10(B). Cellular metal ~~raceways, Schedule 80 PVC conduit, Type RTRC marked with the suffix -XW, or Type MI, Type TC, or Type MC cable, or Type PLTC and Type PLTC-ER cable in accordance with the provisions of Article 725 , including installation in cable tray systems or Type ITC and Type ITC-ER cable as permitted in 727.4 . The cable shall be terminated with listed fittings.~~ floor raceways or cellular concrete floor raceways shall be permitted to be used only for supplying ceiling outlets or extensions to the area below the floor, but such raceways shall have no connections leading into or through any Class I location above the floor.

Statement of Problem and Substantiation for Public Input

Wiring methods currently included in 515.7(A) are consistent with Class I, Division 2 wiring methods, however the list is not consistent with the full list of wiring methods permitted for Division 2 in 501.10(B). For example PLTC-ER and ITC-ER cables are permitted in Article 515 but not Article 511. Referring back to 501.10(B)(1) will help eliminate inconsistencies that occur when a requirement is updated in one Article such as 501 but not updated in the same requirement in another Article. The proposed changes to 511.7, 514.7, 515.7, and 516.7 ensure consistency and help eliminate confusion.

Related Public Inputs for This Document

Related Input	Relationship
Public Input No. 3168-NFPA 70-2020 [Section No. 511.7(A)(1)]	
Public Input No. 3170-NFPA 70-2020 [Section No. 514.7]	
Public Input No. 3175-NFPA 70-2020 [Section No. 516.7(A)]	
Public Input No. 3204-NFPA 70-2020 [Section No. 516.38(A)]	

Submitter Information Verification

Submitter Full Name: John Simmons
Organization: Florida East Coast JATC
Street Address:
City:
State:
Zip:
Submittal Date: Sun Sep 06 13:15:33 EDT 2020
Committee: NEC-P14

Committee Statement

Resolution: FR-8738-NFPA 70-2021

Statement: Wiring methods currently included in 515.7(A) are consistent with Class I, Division 2 wiring methods, however the list is not consistent with the full list of wiring methods permitted for Division 2 in 501.10(B). Referring back to 501.10(B) will help eliminate inconsistencies that occur when a requirement is updated in one article such as 501 but

not updated in the same requirement in another article. Additionally the pointer to "Part III of Article 501 or 505.17" has been changed since Part III of Article 501 is where the equipment requirements are found for Division classified locations and 505.17 specifically includes portable lighting and portable utilization equipment requirements. This addresses the Style Manual requirements without changing the intent of the Section.

Public Input No. 4608-NFPA 70-2020 [Section No. 515.7(A)]

(A) Fixed Wiring.

All fixed wiring above Class I locations shall be in metal raceways, Schedule 80 PVC conduit, Type RTRC marked with the suffix -XW, or Type MI, Type TC, or Type MC cable, or Type PLTC and Type PLTC-ER cable in accordance with ~~the provisions of Article 725~~ 725.135(J) , including installation in cable tray systems or Type ITC and Type ITC-ER cable as permitted in 727.4. The cable shall be terminated with listed fittings.

Statement of Problem and Substantiation for Public Input

Section 4.1.4 of the 2020 NEC(r) Style Manual prohibits reference to an entire article, with the exception of Article 100. The PLTC-ER requirements are found in Section 725.135(J) as noted so referencing that specific section will address the style manual concern without changing the intent of the section.

Submitter Information Verification

Submitter Full Name: Richard Holub
Organization: The DuPont Company, Inc.
Street Address:
City:
State:
Zip:
Submittal Date: Thu Sep 10 15:47:45 EDT 2020
Committee: NEC-P14

Committee Statement

Resolution: FR-8738-NFPA 70-2021

Statement: Wiring methods currently included in 515.7(A) are consistent with Class I, Division 2 wiring methods, however the list is not consistent with the full list of wiring methods permitted for Division 2 in 501.10(B). Referring back to 501.10(B) will help eliminate inconsistencies that occur when a requirement is updated in one article such as 501 but not updated in the same requirement in another article. Additionally the pointer to "Part III of Article 501 or 505.17" has been changed since Part III of Article 501 is where the equipment requirements are found for Division classified locations and 505.17 specifically includes portable lighting and portable utilization equipment requirements. This addresses the Style Manual requirements without changing the intent of the Section.

Public Input No. 4620-NFPA 70-2020 [Section No. 515.7(C)]

(C) Portable Luminaires or Other Utilization Equipment.

Portable luminaires or other utilization equipment and their flexible cords shall comply with ~~the provisions~~ Part III of Article 501 or ~~Article~~ 505.17 for the class of location above which they are connected or used.

Statement of Problem and Substantiation for Public Input

Section 4.1.4 of the 2020 NEC(r) Style Manual prohibits references to an entire article, with the exception of Article 100. As such, it is recommended to change the pointer to "Part III of Article 501 or 505.17" since Part III of Article 501 is where the equipment requirements are found for Division classified locations and 505.17 specifically includes portable lighting and portable utilization equipment requirements. This should satisfy the Style Manual requirements without changing the intent of the Section.

Submitter Information Verification

Submitter Full Name: Richard Holub
Organization: The DuPont Company, Inc.
Street Address:
City:
State:
Zip:
Submittal Date: Thu Sep 10 15:53:56 EDT 2020
Committee: NEC-P14

Committee Statement

Resolution: FR-8738-NFPA 70-2021

Statement: Wiring methods currently included in 515.7(A) are consistent with Class I, Division 2 wiring methods, however the list is not consistent with the full list of wiring methods permitted for Division 2 in 501.10(B). Referring back to 501.10(B) will help eliminate inconsistencies that occur when a requirement is updated in one article such as 501 but not updated in the same requirement in another article. Additionally the pointer to "Part III of Article 501 or 505.17" has been changed since Part III of Article 501 is where the equipment requirements are found for Division classified locations and 505.17 specifically includes portable lighting and portable utilization equipment requirements. This addresses the Style Manual requirements without changing the intent of the Section.

Public Input No. 2078-NFPA 70-2020 [Section No. 515.9]

515.9 Sealing.

Sealing requirements shall apply to horizontal as well as to vertical boundaries of the defined Class I locations. ~~Buried raceways and cables under defined Class I locations shall be considered to be within a Class I, Division 1 or Zone 1 location.~~

Statement of Problem and Substantiation for Public Input

Recommendation to relocate the last sentence of 515.9 to section 515.8.

Justification: Section 515.8 specifically deals with Underground Wiring which should include the "buried raceways and cables..." statement in the last sentence of 515.9. Section 515.8 seems like a more logical place to put this sentence.

Submitter Information Verification

Submitter Full Name: Henry Matthews
Organization: Marathon Petroleum Company
Street Address:
City:
State:
Zip:
Submittal Date: Wed Jul 29 08:19:48 EDT 2020
Committee: NEC-P14

Committee Statement

Resolution: The text the PI proposes to relocate provides information needed to determine the correct wiring means required for the underground location. It does not belong in 515.8.

Public Input No. 4634-NFPA 70-2020 [Section No. 515.10]

515.10 Special Equipment — Gasoline Dispensers.

Where gasoline or other volatile flammable liquids or liquefied flammable gases are dispensed at bulk stations, ~~the applicable provisions of Article~~ 514.1 shall apply.

Statement of Problem and Substantiation for Public Input

Section 4.1.4 of the 2020 NEC(r) Style Manual prohibits references to an entire article, with the exception of Article 100. Pointing the user to 514.1 makes it clear that when motor fuel or other flammable liquid dispensing is done in the facility, that falls within the scope of the other article without specifically pointing to the entire article.

Submitter Information Verification

Submitter Full Name: Richard Holub
Organization: The DuPont Company, Inc.
Street Address:
City:
State:
Zip:
Submittal Date: Thu Sep 10 16:04:54 EDT 2020
Committee: NEC-P14

Committee Statement

Resolution: FR-8490-NFPA 70-2021

Statement: The reference has been changed for compliance with the NEC Style Manual regarding references to entire articles. Additionally the phrase “the provisions of” has been deleted as directed by the Style Manual.

Public Input No. 2748-NFPA 70-2020 [Section No. 516.5(D)(4)]

(4) Enclosed Spray Booths and Spray Rooms.

For spray application operations confined to an enclosed spray booth or room, electrical area classification shall be as follows:

(1) The area within 915 mm (3 ft) of any opening shall be classified as Class I, Division 2; Class I, Zone 2; Class II, Division 2; or Zone 22 locations, whichever is applicable, as shown in Figure 516.5(D)(4).

(2) ~~Where automated spray~~ Where spray application equipment is used, the area outside the access doors shall be unclassified provided the door interlock prevents the spray application operations when the door is open.

(3) Where exhaust air is permitted to be recirculated, both of the following shall apply:

(4) The interior of any recirculation path from the secondary particulate filters up to and including the air supply plenum shall be classified as Class I, Division 2; Class I, Zone 2; Class II, Division 2; or Zone 22 locations, whichever is applicable.

(5) The interior of fresh air supply ducts shall be unclassified.

(6) Where exhaust air is not recirculated, the interior of fresh air supply ducts and fresh air supply plenums shall be unclassified.

[**33:**6.5.4]

Statement of Problem and Substantiation for Public Input

With the door being interlocked as to immediately stop the incoming air supply, and the exhaust system still active, there would not in my opinion be any need for the areas within 3ft outside the doors of the enclosed spray booth to be classified as a Class 1 Division 2 location as there is no possibility for any residue or vapors to escape.

I have encountered a situation on a spray booth installation where both lights and 12v DC door switches were within the 3ft boundary, requiring them to be both listed for the location as well as the installation itself being explosionproof where necessary by code, although it doesn't seem necessary otherwise. The exhaust fans are controlled by a PLC in the spray booth manufacturer's listed control cabinet to run continuously, as well as the air supply to any spray equipment being interlocked to the doors. As soon as the door is opened, the air is immediately cut off with a valve at the regulator that is controlled by the PLC.

With the door/air supply interlock, as well as continuous airflow, it seems unnecessary to have the Class 1 Div 2 boundary outside the spray booth.

Submitter Information Verification

Submitter Full Name: Brian Broomfield
Organization: Broomfield Laboratories
Street Address:
City:
State:
Zip:

Submittal Date: Sun Aug 30 17:13:54 EDT 2020
Committee: NEC-P14

Committee Statement

Resolution: This is extracted text from NFPA 33. This Public Input should be directed to the Finishing Processes Committee to avoid conflicts.

Public Input No. 4644-NFPA 70-2020 [Section No. 516.6(A)]

(A) Wiring and Equipment — Vapors.

All electrical wiring and equipment within the Class I location (containing vapor only — not residues) defined in 516.5 shall comply with the applicable ~~provisions~~ Part II and Part III of Article 501 or ~~Article 505~~ the zone hazardous (classified) location requirements , as applicable.

Statement of Problem and Substantiation for Public Input

Section 4.1.4 of the 2020 NEC(r) Style Manual prohibits references to an entire article, with the exception of Article 100. Pointing the user to Part II and Part III of Article 501 or the zone hazardous (classified) location requirements satisfies the style manual without changing the intent of the section.

Submitter Information Verification

Submitter Full Name: Richard Holub
Organization: The DuPont Company, Inc.
Street Address:
City:
State:
Zip:
Submittal Date: Thu Sep 10 16:13:12 EDT 2020
Committee: NEC-P14

Committee Statement

Resolution: FR-8739-NFPA 70-2021

Statement: Section 4.1.4 of the 2020 NEC Style Manual prohibits references to an entire article, with the exception of Article 100. Pointing the user to Part II and Part III of Article 501 or 505.17 through 505.26 (which are the equivalent requirements for a zone hazardous (classified) location) satisfies the style manual without changing the intent of the section.

Public Input No. 3175-NFPA 70-2020 [Section No. 516.7(A)]

(A) Wiring.

All fixed wiring above ~~the Class I and II~~ Class I locations shall comply with be ~~in metal raceways, Type PVC conduit, Type RTRC conduit, or electrical nonmetallic tubing; where cables are used, they shall be Type MI, Type TC, or Type MC cable. Cellular metal floor raceways shall only be permitted to supply ceiling outlets or as extensions to the area below the floor of a Class I or II location. Where~~ installed as permitted in 501.10(B). Where cellular metal raceways are used, they shall not have connections leading into or passing through the Class I or II location unless suitable seals are provided.

Statement of Problem and Substantiation for Public Input

This PI with similar proposed changes to 511.7, 514.7, and 515.7 will correct inconsistency in the requirements for wiring above Class I locations. The locations that the requirements of the dot 7 section refer to are all consistent with a Class 1, Division 2 location. Making a reference to 501.10(A)(1) in each section to the wiring methods rather than providing a list in each section reduces the chances that a change made in 501.10(B)(1) will not result in all of the other sections being changed.

Related Public Inputs for This Document

Related Input	Relationship
Public Input No. 3170-NFPA 70-2020 [Section No. 514.7]	
Public Input No. 3168-NFPA 70-2020 [Section No. 511.7(A)(1)]	
Public Input No. 3167-NFPA 70-2020 [Section No. 515.7(A)]	
Public Input No. 3204-NFPA 70-2020 [Section No. 516.38(A)]	

Submitter Information Verification

Submitter Full Name: John Simmons
Organization: Florida East Coast JATC
Street Address:
City:
State:
Zip:
Submittal Date: Sun Sep 06 14:40:26 EDT 2020
Committee: NEC-P14

Committee Statement

Resolution: FR-8575-NFPA 70-2021

Statement: The permitted wiring methods should not be located in another article. Having the wiring means in the article that requires them makes the section clearer. The panel did that the subdivision contains a long list of approved wiring methods, in paragraph format. Section 3.3.2 of the NEC Style Manual states that lists or tables should be used rather than long text descriptions. The first revision revises 516.7(A) into list format to add clarity. It also corrects the reference to an entire article as required by Section 4.1.4 of the NEC Style

Manual.

Public Input No. 4185-NFPA 70-2020 [Section No. 516.10(A) [Excluding any Sub-Sections]]

This section shall apply to any equipment using electrostatically charged elements for the atomization, charging, and/or precipitation of hazardous materials for coatings on articles or for other similar purposes in which the charging or atomizing device is attached to a mechanical support or manipulator. This shall include robotic devices. This section shall not apply to devices that are held or manipulated by hand. Where robot or programming procedures involve manual manipulation of the robot arm while spraying with the high voltage on, the provisions of 516.10(B) shall apply. The installation of electrostatic spraying equipment shall comply with 516.10(A)(1) through (A)(10). Spray equipment shall be listed. All automatic electrostatic equipment systems shall comply with 516.6(~~A~~ B) ~~through (~~ , 6(C), 6(D), and 6(F).

Statement of Problem and Substantiation for Public Input

The present text, covering hazardous dusts, is inadequately correlated with what it purports to require. 516.6(A) is a complete non-starter because it only addresses vapors and Class I locations; 516.10(A) addresses Class II locations. 516.6(E) cannot apply because the reference is circular. 516.10(A) now tells the user to comply with 516.6(E); 516.6(E) tells the user to comply with 516.10(A) among other things. This PI corrects these issues.

Submitter Information Verification

Submitter Full Name: Frederic Hartwell
Organization: Hartwell Electrical Services, Inc.
Affiliation: self
Street Address:
City:
State:
Zip:
Submittal Date: Thu Sep 10 00:40:57 EDT 2020
Committee: NEC-P14

Committee Statement

Resolution: FR-8699-NFPA 70-2021
Statement: The reference to 516.6(A) has been removed as it only applies to Class I equipment and the reference to 516.6(E) has been removed as it created a circular reference.

Public Input No. 4651-NFPA 70-2020 [Section No. 516.10(C)(1)]

(1) Electrical Equipment and Sources of Ignition.

Electrical equipment and other sources of ignition shall comply with ~~the requirements~~ Part III of Article 502. Portable electric luminaires and other utilization equipment shall not be used within a Class II location during operation of the finishing processes. Where such luminaires or utilization equipment are used during cleaning or repairing operations, they shall be of a type identified for Class II, Division 1 locations, and all exposed metal parts shall be connected to an equipment grounding conductor.

Exception: Where portable electric luminaires are required for operations in spaces not readily illuminated by fixed lighting within the spraying area, they shall be of the type listed for Class II, Division 1 locations where readily ignitible residues may be present.

Statement of Problem and Substantiation for Public Input

Section 4.1.4 of the 2020 NEC(r) Style Manual prohibits references to an entire article, with the exception of Article 100. Pointing the user to Part III of Article 502 gets the user to the equipment requirements in the article without specifically pointing to the entire article.

Submitter Information Verification

Submitter Full Name: Richard Holub
Organization: The DuPont Company, Inc.
Street Address:
City:
State:
Zip:
Submittal Date: Thu Sep 10 16:17:37 EDT 2020
Committee: NEC-P14

Committee Statement

Resolution: FR-8700-NFPA 70-2021
Statement: The reference to Article 502 was revised to reference Part III of Article 502 and a new reference to 506.20 has been included.

Public Input No. 3204-NFPA 70-2020 [Section No. 516.38(A)]

(A) Wiring.

All fixed wiring above ~~the Class I and II~~ Class I locations shall comply with be ~~in metal raceways, Type PVC conduit, Type RTRC conduit, or electrical nonmetallic tubing; where cables are used, they shall be Type MI, Type TC, or Type MC cable. Cellular metal floor raceways shall only be permitted to supply ceiling outlets or as extensions to the area below the floor of a Class I or II location.~~ installed as permitted in 501.10(B) Where cellular metal raceways are used, they shall not have connections leading into or passing through the Class I or II location unless suitable seals are provided.

Statement of Problem and Substantiation for Public Input

This PI is related to PIs submitted for 511.7, 514.7, 515.7, and 516.7. The proposed text refers to 501.10(B)(1) for the permitted wiring for locations above Class I. The proposed changes adds consistency to these sections.

Related Public Inputs for This Document

Related Input	Relationship
Public Input No. 3175-NFPA 70-2020 [Section No. 516.7(A)]	
Public Input No. 3170-NFPA 70-2020 [Section No. 514.7]	
Public Input No. 3168-NFPA 70-2020 [Section No. 511.7(A)(1)]	
Public Input No. 3167-NFPA 70-2020 [Section No. 515.7(A)]	

Submitter Information Verification

Submitter Full Name: John Simmons
Organization: Florida East Coast JATC
Street Address:
City:
State:
Zip:
Submittal Date: Sun Sep 06 18:13:35 EDT 2020
Committee: NEC-P14

Committee Statement

Resolution: FR-8576-NFPA 70-2021

Statement: The subdivision was revised to place the approved wiring means in list format in accordance with the guidance provided in Section 3.3.2 of the NEC Style Manual and to coordinate with similar revisions to 511.7(A), 514.7, 515.7(A), and 516.7(A).

Public Input No. 2287-NFPA 70-2020 [New Section after Table]

Table 13

Equipment suitable for hazardous (classified) locations

See attached file

Additional Proposed Changes

File Name	Description	Approved
NEC_Table_2020-08-14_R1.docx	Proposed Table 13 (R1)	

Statement of Problem and Substantiation for Public Input

Replace the existing tables in Article 505 and 506 with a comprehensive Table addressing all of the Protection Techniques or Types of Protection for Hazardous Locations. Add applicability details for Article 500 that never existing in a single location.

See also PI728, PI 730, PI2241, PI2258, PI2263, & PI2264 for other changes that will affect this Table if accepted.

Submitter Information Verification

Submitter Full Name: William Lawrence
Organization:
Street Address:
City:
State:
Zip:
Submittal Date: Thu Aug 13 15:44:39 EDT 2020
Committee: NEC-P14

Committee Statement

Resolution: FR-8648-NFPA 70-2021

Statement: This action adds new Table 13 covering protection techniques for hazardous (classified) locations to Chapter 9. The new table to replaces existing tables in Article 505 and 506 with one comprehensive Table addressing all of the Protection Techniques or Types of Protection for Hazardous Locations. This action also incorporates the recommendations of PIs 2220, 2263, 722 and 728.

Table 13

Equipment suitable for hazardous (classified) locations

Area Classification	Type (Level) of Protection	
Zone 0	Intrinsically safe	Intrinsically safe *for Class I, Division 1*
	Intrinsic safety (Group II)	ia
	Encapsulation (Group II)	ma
	Flameproof (Group II)	da*
	Inherently safe optical radiation	op is, *with EPL Ga***
	Optical system with interlock	op sh, *with EPL Ga***
	Special protection (Group II)	sa [PI728]
	EPL††	Ga
Zone 1	*Equipment suitable for use in Zone 0*	
	Equipment suitable for use in Class I, Division 1	
	Flameproof (Group II)	d, db
	Intrinsic safety (Group II)	ib
	Increased safety (Group II)	e, eb
	Pressurized enclosure (Group II)	p, px, pxb, py, pyb
	Encapsulation (Group II)	m, mb
	Pressurized room (Group II)	pb [PI2263]
	Powder filling (Group II)	q, qb
	Liquid immersion (Group II)	o, ob
	Electrical resistance trace heating	60079-30-1, *with EPL Gb***
	Skin effect trace heating	IEEE 844.1, *with EPL Gb***
	Inherently safe optical radiation	op is, *with EPL Gb***
	Optical system with interlock	op sh, *with EPL Gb***
	Protected optical radiation	op pr, *with EPL Gb**
	Special protection (Group II)	sb [PI728]
	EPL††	Gb
Zone 2	*Equipment suitable for use in Zone 0*	
	Equipment suitable for use in Zone 1	
	Equipment suitable for use in Class I, Division 1	
	Equipment suitable for use in Class I, Division 2	
	Type of Protection “n” (Group II)	nA, nC, nL, nR
	Pressurized enclosure (Group II)	pz, pzc
	Intrinsic safety (Group II)	ic
	Flameproof (Group II)	dc
	Increased safety (Group II)	ec
	Liquid immersion (Group II)	oc
	Encapsulation (Group II)	mc
	Pressurized room (Group II)	pc [PI2263]
	Ventilated room (Group II)	v, vc [PI2263]
	Electrical resistance trace heating	60079-30-1, *with EPL Gc***
	Skin effect trace heating	IEEE 844.1, *with EPL Gc***

	Impedance heating	IEEE 844.3, *with EPL Gc*** [PI2258]
	Inherently safe optical radiation	op is, *with EPL Gc***
	Optical system with interlock	op sh, *with EPL Gc***
	Protected optical radiation	op pr, *with EPL Gc***
	Special protection (Group II)	sc [PI728]
	EPL††	Gc
	Other electrical apparatus‡	
Unclassified	Associated apparatus for Zone 0 (Group II)	[ia]
	Associated apparatus for Zone 1 (Group II)	[ib]
	Associated apparatus for Zone 2 (Group II)	[ic]
	Associated pressurization equipment (Group II)	[p]
	Associated optical radiation equipment (Group II)	[op is]
	Associated optical radiation equipment (Group II)	[op sh]
Zone 20	*Equipment suitable for use in Class II, Division 1*	
	Intrinsic safety (Group III)	ia
	Intrinsically safe	Intrinsically safe *for Class II Division 1*
	Protection by enclosure (Group III)	ta
	Encapsulation (Group III)	ma
	Inherently safe optical radiation	op is, *with EPL Da***
	Optical system with interlock	op sh, *with EPL Da***
	Special protection (Group III)	sa
	EPL††	Da
Group IIIA Only	*Equipment suitable for us in Class III, Division 1*	
Zone 21	*Equipment suitable for use in Zone 20*	
	Equipment suitable for use in Class II, Division 1	
	Intrinsic safety (Group III)	ib
	Protection by enclosure (Group III)	tb
	Pressurized enclosure (Group III)	p, px, pxb, py, pyb
	Encapsulation (Group III)	mb
	Pressurized room (Group III)	pb [PI2264]
	Electrical resistance trace heating	60079-30-1, *with EPL Db***
	Skin effect trace heating	IEEE 844.1, *with EPL Db***
	Impedance heating	IEEE 844.3, *with EPL Db*** [PI2258]
	Inherently safe optical radiation	op is, *with EPL Db***
	Optical system with interlock	op sh, *with EPL Db***
	Protected optical radiation	op pr, *with EPL Db***
	Special protection (Group III)	sb [PI730]
	EPL††	Db
Group IIIA Only	*Equipment suitable for us in Class III, Division 1*	
Zone 22	*Equipment suitable for use in Zone 20*	
	Equipment suitable for use in Zone 21	
	Equipment suitable for use in Class II, Division 1	
	Equipment suitable for use in Class II, Division 2	
	Intrinsic safety (Group III)	ic
	Protection by enclosure (Group III)	tc
	Pressurized enclosure (Group III)	pz, pzc
	Encapsulation (Group III)	mc
	Pressurized room (Group III)	pc [PI2264]

	Ventilated room (Group III)	v, vc [PI2264]
	Electrical resistance trace heating	60079-30-1, *with EPL Dc***
	Skin effect trace heating	IEEE 844.1, *with EPL Dc***
	Impedance heating	IEEE 844.3, *with EPL Dc*** [PI2258]
	Inherently safe optical radiation	op is, *with EPL Dc***
	Optical system with interlock	op sh, *with EPL Dc***
	Protected optical radiation	op pr, *with EPL Dc***
	Type 22 Vacuum Cleaners and Dust Collectors	62784
	Special protection (Group III)	sc [PI730]
	EPL††	Dc
	Other electrical apparatus‡	
Group IIIA Only	*Equipment suitable for us in Class III, Division 2*	
Unclassified	Associated apparatus for Zone 20 (Group III)	[ia]
	Associated apparatus for Zone 21 (Group III)	[ib]
	Associated apparatus for Zone 22 (Group III)	[ic]
	Associated pressurization equipment (Group III)	[p]
	Associated optical radiation equipment (Group III)	[op is]
	Associated optical radiation equipment (Group III)	[op sh]
Class I, Division 1	*Equipment marked for use in Class I, Division 1*†	
	Intrinsically safe	Intrinsically safe *for Class I*
	Pressurized Enclosure	Type X*, for Class I*
	Pressurized Enclosure	Type Y, *for Class I*
	Equipment suitable for use in Zone 0	
	Intrinsic safety (Group II)	ia
	Encapsulation (Group II)	ma
	Inherently safe optical radiation	op is, *with EPL Ga***
	Optical system with interlock	op sh, *with EPL Ga**
	Special protection (Group II)	sa [PI728]
Class I, Division 2	*Equipment suitable for use in Class I, Division 1*	
	Equipment marked for use in Class I, Division 2†	
	Pressurized Enclosure	Type Z, *for Class I*
	Equipment suitable for use in Zone 0, Zone 1 or Zone 2	
	Type of Protection “n” (Group II)	nA, nC, nL, nR
	Pressurized enclosure (Group II)	px, pxb, py, pyb, pz, pzc
	Intrinsic safety (Group II)	ia, ib, ic
	Flameproof (Group II)	da, db, dc
	Increased safety (Group II)	eb, ec
	Liquid immersion (Group II)	ob, oc
	Encapsulation (Group II)	ma, mb, mc
	Pressurized room (Group II)	pb [PI2263]
	Pressurized room (Group II)	pc [PI2263]
	Ventilated room (Group II)	v, vc [PI2263]
	Electrical resistance trace heating	60079-30-1, *with EPL Gb or Gc***
	Skin effect trace heating	IEEE 844.1, *with EPL Gb or Gc***
	Impedance heating	IEEE 844.3, *with EPL Gb or Gc*** [PI2258]
	Inherently safe optical radiation	op is, *with EPL Ga, Gb or Gc***
	Optical system with interlock	op sh, *with EPL Ga, Gb or Gc***
	Protected optical radiation	op pr, *with EPL Gb or Gc***

	Special protection (Group II)	sa, sb, sc [PI728]
	Other electrical apparatus‡	
Unclassified	Associated apparatus for Class I, Division 1	
Class II, Division 1§	*Equipment marked for use in Class II, Division 1*†	
	Intrinsically safe	Intrinsically safe *for Class II*
	Pressurized Enclosure	Type X, *for Class II*
	Pressurized Enclosure	Type Y, *for Class II*
	Equipment suitable for use in Zone 20	
	Intrinsic safety (Group III)	ia
	Protection by enclosure (Group III)	ta
	Encapsulation (Group III)	ma
	Inherently safe optical radiation	op is, *with EPL Da***
	Optical system with interlock	op sh, *with EPL Da***
	Special protection (Group III)	sa [PI730]
Class II, Division 2§	*Equipment suitable for use in Class II, Division 1*	
	Equipment marked for use in Class II, Division 2†	
	Pressurized Enclosure	Type Z, *for Class II*
	Equipment suitable for use in Zone 20, Zone 21 or Zone 22	
	Intrinsic safety (Group III)	ia, ib, ic
	Protection by enclosure (Group III)	ta, tb, tc
	Pressurized enclosure (Group III)	px, pxb, py, pyb, pz, pzc
	Encapsulation (Group III)	ma, mb, mc
	Pressurized room (Group III)	pb [PI2264]
	Pressurized room (Group III)	pc [PI2264]
	Ventilated room (Group III)	v, vc [PI2264]
	Electrical resistance trace heating	60079-30-1, *with EPL Db or Dc***
	Skin effect trace heating	IEEE 844.1, *with EPL Db or Dc***
	Impedance heating	IEEE 844.3, *with EPL Db or Dc*** [PI2258]
	Inherently safe optical radiation	op is, *with EPL Da, Db or Dc***
	Optical system with interlock	op sh, *with EPL Da, Db or Dc***
	Protected optical radiation	op pr, *with EPL Db or Dc***
	Special protection (Group III)	sa, sb, sc [PI730]
	Other electrical apparatus‡	
Unclassified	Associated apparatus for Class II, Division 1	
Class III, Division 1	*Equipment suitable for use in Class II, Division 1*	
	Equipment marked for use in Class III, Division 1†	
	Intrinsically safe	Intrinsically safe for Class II or III
	Equipment suitable for use in Zone 20 or Zone 21	
	Intrinsic safety (Group III)	ia, ib
	Protection by enclosure (Group III)	ta, tb
	Encapsulation (Group III)	ma, mb
	Inherently safe optical radiation	op is, *with EPL Da or Db***
	Optical system with interlock	op sh, *with EPL Da or Db***
	Special protection (Group III)	sa [PI730]

Class III, Division 2	*Equipment suitable for use in Class II, Division 1*	
	Equipment suitable for use in Class II, Division 2	
	Equipment suitable for use in Class III, Division 1	
	Equipment marked for use in Class III, Division 2†	
	Intrinsically safe	Intrinsically safe *for Class ll or III*
	Equipment suitable for use in Zone 20, Zone 21 or Zone 22	
	Intrinsic safety (Group III)	ia, ib, ic
	Protection by enclosure (Group III)	ta, tb, tc
	Pressurized enclosure (Group III)	px, pxb, py, pyb, pz, pzc
	Encapsulation (Group III)	ma, mb, mc
	Electrical resistance trace heating	60079-30-1, *with EPL Db or Dc***
	Skin effect trace heating	IEEE 844.1, *with EPL Db or Dc***
	Impedance heating	IEEE 844.3, *with EPL Db or Dc*** [PI2258]
	Inherently safe optical radiation	op is, *with EPL Da, Db or Dc***
	Optical system with interlock	op sh, *with EPL Da, Db or Dc***
	Protected optical radiation	op pr, *with EPL Db or Dc***
	Special protection (Group III)	sa, sb, sc [PI730]
	Other electrical apparatus‡	
Unclassified	Associated apparatus for Class III, Division 1	

Note: *This table is structured to show the area classification on the left side and the permitted equipment on the right side. Zone equipment is suitable for use in some Class/Division locations and vice versa. This is indicated by the phrase "Equipment suitable for use in .....". For example, in Class I, Division 1 locations, "Equipment suitable for use in Zone 0" means all equipment listed under Zone 0 can be used with an appropriate equipment group and temperature class.*

† *With the exception of Intrinsically Safe or Purged / Pressurized equipment, equipment for use in a Class XX, Division XX, location is not required to be marked with a Type of Protection, only the location where that equipment is permitted to be installed.*

‡ *"Other electrical apparatus" means electrical apparatus complying with the requirements of a recognized standard for industrial electrical apparatus that does not in normal service*
a) have ignition-capable hot surfaces;
b) produce incendive arcs or sparks.
See 501.105(B), 501.115(B), 501.125(B), 502.100(B), 501.115(B), 502.125(B), or 502.130(B). "Other electrical apparatus" also includes equipment or systems currently acceptable as alternative means of protection (see 500.7).

§ *For use in Class II and Class III, such (Zone acceptable) equipment is subject to the limitation of 502.6 or 503.6 respectively. Group IIIA equipment is not suitable for use in Class II Locations.*

** *Equipment marked with these Types of Protection is available in multiple Levels of Protection that are not specifically identified within the Ex marking.*

†† *The EPL takes precedence over the Type of Protection, for example "AEx ia __ __ Gb" is suitable for Zone 1 (not Zone 0), "AEx op is __ __ Db" is suitable for Zone 21 (not Zone 20), and "AEx 60079-30-1 __ __ Gc is suitable for Zone 2 (not Zone 1). Selection according to the marked EPL is critical to the safe application of this equipment.*

‡‡ *In Class III, Division 1; switches, controllers, circuit breakers, fuses, control transformers, resistors, utilization equipment (fixed and portable), electric cranes, hoists, and similar equipment may be housed in dusttight enclosures.*